The Role of Ductility in Seismic Design

If the technical bases of building code provisions for seismic design loads are not thoroughly understood, the use of the code will not necessarily result in a sound structural design. Some level of ductility must be provided.

DAVID O. KNUTTUNEN

EARTHQUAKE loadings on structures are complex, and the dynamic, inelastic response of real structures to intense earthquake shaking tends to be extremely difficult to analyze and understand. Building codes, which usually present seismic design provisions in terms of pseudo-static loadings and elastic analysis, insufficiently emphasize the technical bases of these provisions. In particular, the importance of seismic detailing requirements, which are intended to ensure the ductility of a structure, can be easily misunderstood by those who must interpret the codes. Engineers are used to thinking of ductility as a desirable attribute of structural systems, but secondary in importance to such attributes as strength and stiffness. In seismic design, however, ductility plays a fundamental role in determining the level of force for which a structure must be designed. Even though ductility is essential to code-based seismic design, this fact is rarely explicitly stated, or sufficiently explained, in building codes.

While not denying the usefulness of a detailed analysis of structural response to earthquake loads, a qualitative examination of the dynamic behavior of some very simple structural models can help in achieving a "gut feeling" for the seismic behavior of structures, including the role of ductility in limiting seismic design loads. The use of response spectra as a simple, approximate means of dynamic structural analysis for seismic loadings presents a more quantitative example of the fundamental importance of ductility provisions in code-based seismic design.

The Nature of Seismic Loadings

The behavior of structures subjected to earthquake loads is complex. Earthquake ground motion typically contains many cycles of rapidly varying acceleration, each with a different amplitude and a different duration (see Figure 1). The intensity of shaking during strong earthquakes is sufficient to push most structures into the inelastic range, which greatly complicates their analysis. Inelastic time-history analyses of realistic three-dimensional structures are rarely undertaken in a practical design-office environment, primarily

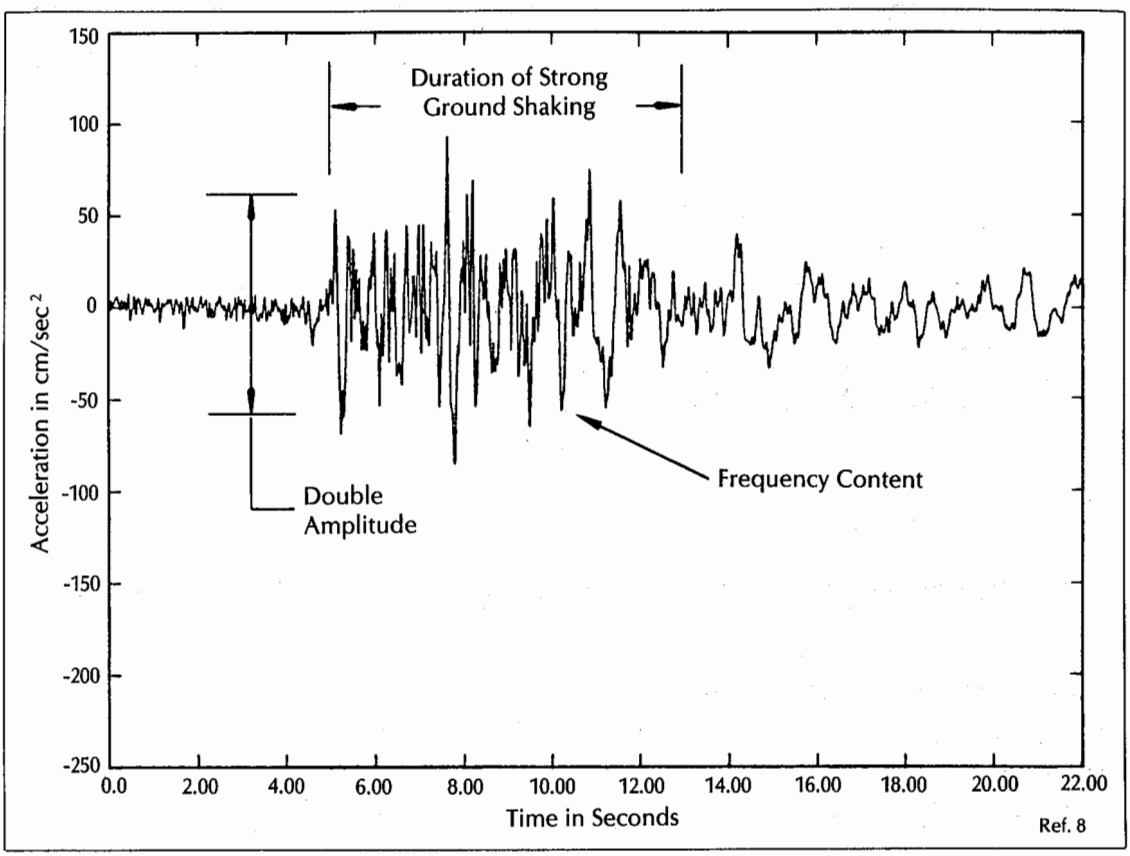

FIGURE 1. An earthquake ground acceleration record.

due to the modeling complexities and the immense amounts of computer time that are involved. Even if such an analysis were undertaken, it would only furnish the response of a building to a particular earthquake. A future earthquake may prove much more damaging.

Because of the practical impossibility of *exact* seismic load analysis, earthquake-resistant design is presently based on various approximate methods. One such method uses *response spectra,* which are derived from basic physical principles and from empirical observations of the effects of various earthquakes on structures of different natural periods.[1,2] However, the more common approach, which is currently implemented in most building codes, is to use some fairly simple formulas to determine a design base shear and to distribute this shear vertically to the various levels of the building. Methods of elastic analysis are then used to distribute these pseudo-static forces to the various elements of the structure.[3,4]

Unfortunately, this form of code-based analysis tends to obscure the dynamic and inelastic characteristics of the response of real structures to major earthquakes. In particular, the role of inelastic behavior and ductility in determining static loadings, although fundamental, is rarely explicitly stated in code formulations.

Simplified Models for Structural Response

The qualitative analysis of some very simple structures, such as those illustrated in Figures 2 through 6, can be very helpful in achieving a "gut feeling" for the response of structures to earthquake loading. In these examples, a simple idealization of a single-story portal frame is analyzed. The girder is assumed to be rigid, so that all bending occurs in the columns. Also, the mass of the entire structure is assumed to be lumped at the floor level.

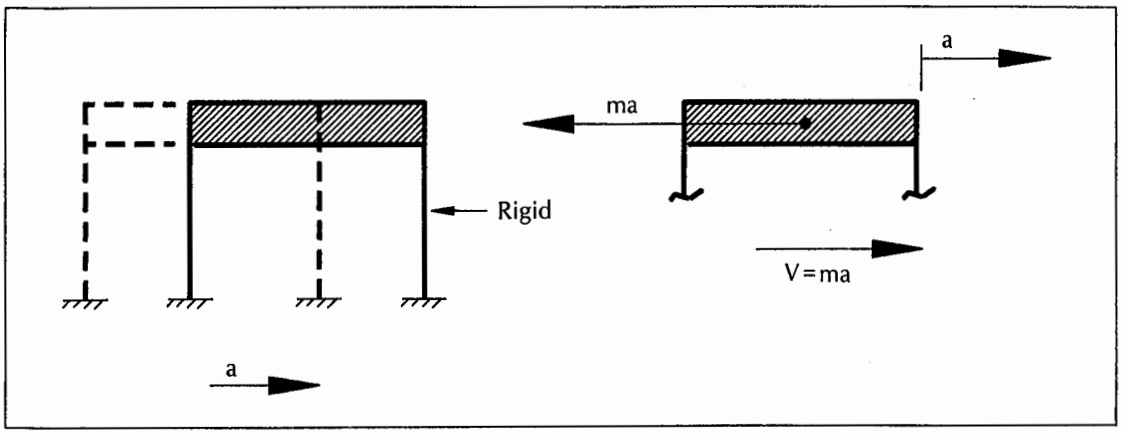

FIGURE 2. A rigid structure subject to base acceleration.

This type of structure is presented since its behavior is very easy to visualize. However, the principles derived from its analysis can also apply to braced frame or shearwall buildings. In their most general terms, these principles can apply to more realistic, multistory structures as well.

Response of Elastic Structures to Ground Accelerations

If the columns of a portal frame were completely rigid, and the structure were subjected to an acceleration of its base, the shearing force in the structure would be equal to the mass of the structure times the acceleration of the base (see Figure 2). If the direction (sign) of the base acceleration changed, the direction of the inertial force would change instantaneously, and the $V = ma$ relationship would remain true. Thus, the maximum force experienced by a rigid structure would always be exactly equal to the maximum base acceleration times the mass of the structure.

When a more realistic, elastic structure is subjected to a base acceleration, its supports will flex and the mass will initially lag behind the base (see Figure 3). The initial shearing force in the supports is equal to the displacement of the mass relative to the base times the stiffness of the supports. For example, for the portal frame shown in Figure 3:

$$V = k\Delta$$

The elastic stiffness of the system, k, is determined by:

$$k = 2 * (12EI_{col}/h^3)$$

where:

E = the modulus of elasticity

I_{col} = the moment of inertia of the column

h = the height of the column

Restated, the formula for the shearing force is:

$$V = (24EI_{col}/h^3)\ (\Delta)$$

The mass of the structure is subjected to an acceleration, a', which is initially less than the base acceleration, a. Equilibrium requires that the inertial force be equal to the shear in the supporting structure:

$$ma' = k\Delta$$

Initially, $k\Delta$ is less than the mass times the ground acceleration.

For an earthquake-type ground motion, a, a' and Δ change with time. When the direction of the base motion changes, the mass of the elastic structure tends to keep moving in the original direction, producing a whiplash effect. Due to this sort of dynamic response, the maximum elastic forces experienced by the structure can be much higher than the product of the mass and the maximum accel-

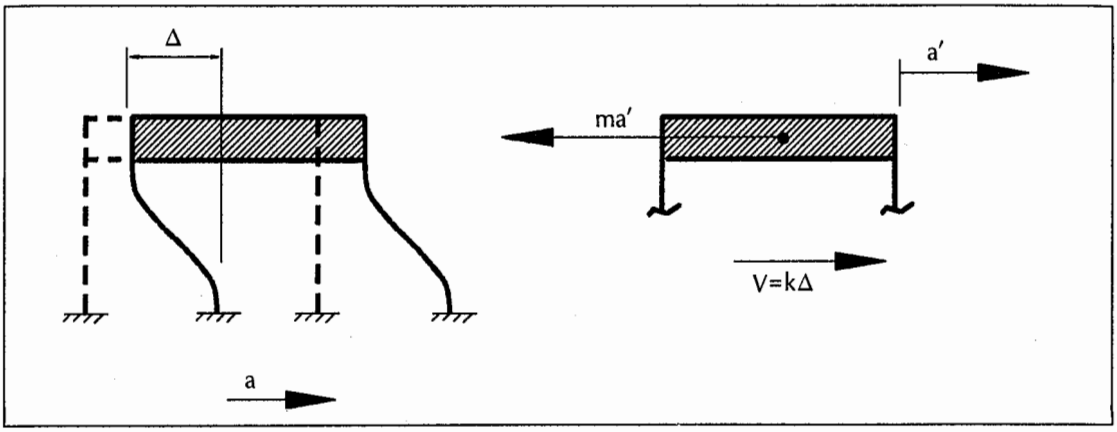

FIGURE 3. An elastic structure subject to base acceleration.

eration of the ground.

For most structural models, some degree of damping should be included (see Figure 4). The damping effect adds another term to the balance of forces equation:

$$ma' = k\Delta - cv$$

where:

c = the coefficient of damping,

v = the velocity of the mass of the structure, which has a positive sign if it is in the same direction as a'.

The damping coefficient is a measure of the energy dissipation that occurs in a structure due to such factors as internal friction in connections. Since the damping force always tends to resist the motion of the structure relative to its base, the presence of damping reduces the maximum value of structural response to seismic load.

The amount of damping present in a structure is usually expressed as the ratio of the actual damping coefficient to the critical damping coefficient. Typical structural damping ratios used in seismic design vary from 5 to 10 percent, although values from 1 to 20 percent may be appropriate in certain cases.[2]

Limitation of Seismic Forces Due to Yielding

An elasto-plastic structure is one that behaves like an elastic structure up to a determined yield limit. At that point, plastic deformation takes place, and the system begins to deflect

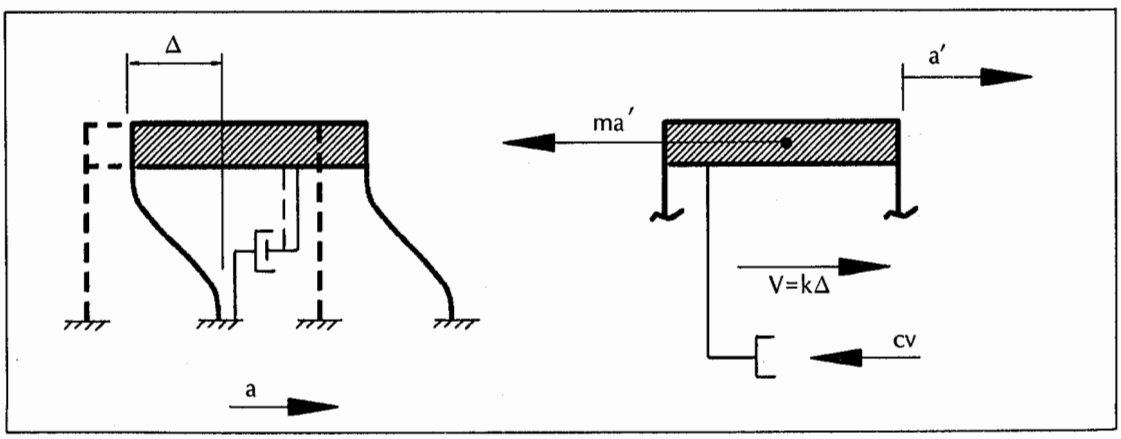

FIGURE 4. An elastic structure with damping.

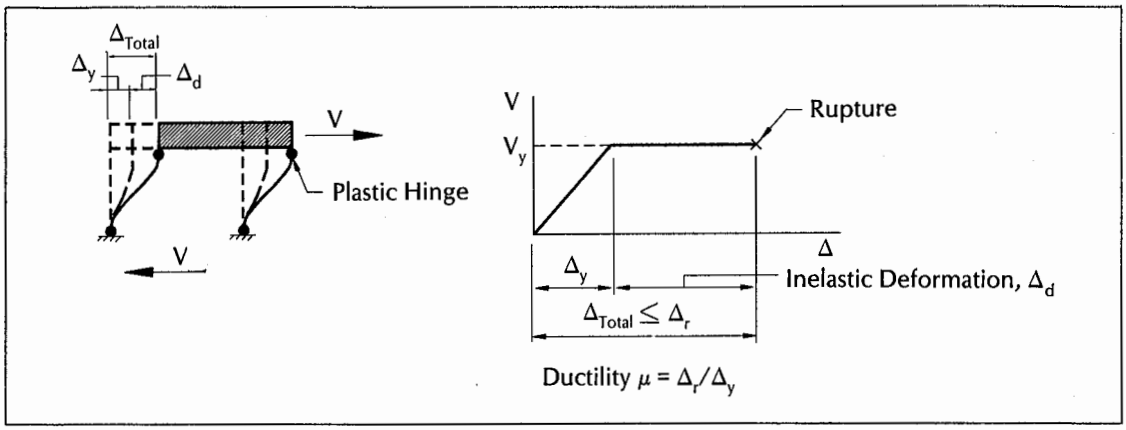

FIGURE 5. An elasto-plastic structure.

continuously without any additional load. This deformation continues until the structure eventually collapses or the material ruptures or buckles. The available ductility, or ductility capacity, of the structure can be defined as the total deflection at collapse or rupture divided by the elastic deflection at first yield (see Figure 5).

An elasto-plastic structure subjected to a base acceleration initially responds like an elastic system. However, if the deflection, Δ, exceeds the yield deflection, Δ_y, the shear levels off at the yield limit (see Figure 6). Larger forces cannot be developed in the structure. Put another way, *it is not necessary to design the structure for larger forces.*

The structure shown in Figures 5 and 6 becomes unstable after the plastic hinges form. If the acceleration continued in the same direction for an extended period of time, the structure would collapse. However, earthquake accelerations do not remain constant, but change direction rapidly. When the acceleration reverses, the deflection of the mass relative to the ground lessens and the structure unloads as indicated in Figure 6.

For the structure to remain safe after yielding has commenced, the maximum inelastic deflection that occurs in the structure during the earthquake (the *response*) must be less than the deflection required to cause the structure to collapse. If the required ductility, μ_{req}, is defined as the maximum actual deflection response divided by the deflection at yield, then the available ductility in the structure must be ensured to be at least equal to the ductility required, or demanded, by the earthquake:

$$\mu_{avail} = \mu_{req}$$

For a given earthquake ground motion, the force that the structure must be able to resist elastically is inversely related to the available ductility, which is the basis for code provisions that prescribe a lower design force for structures with higher levels of ductility. However, the converse of this rule is also true. For a given earthquake, the lower the available resistance (strength) of the structure, the higher the level of ductility that will be *demanded* if the structure is not to collapse.

For more complex structures and for actual, reversible earthquake loadings, while the concept of ductility becomes much more complex to define with precision,[5] the basic result is the same. Seismic design forces can be reduced where high levels of inelastic deformation are possible. However, the structural detailing must be consistent with the level of ductility that is assumed, explicitly or implicitly, in the design.

Structures designed to have extremely high levels of ductility, with correspondingly low elastic resistance, will experience large inelastic deflections when an earthquake occurs. Since these deflections can cause extensive damage to non-structural components, they must be taken into account in the design of highly ductile structures. Large

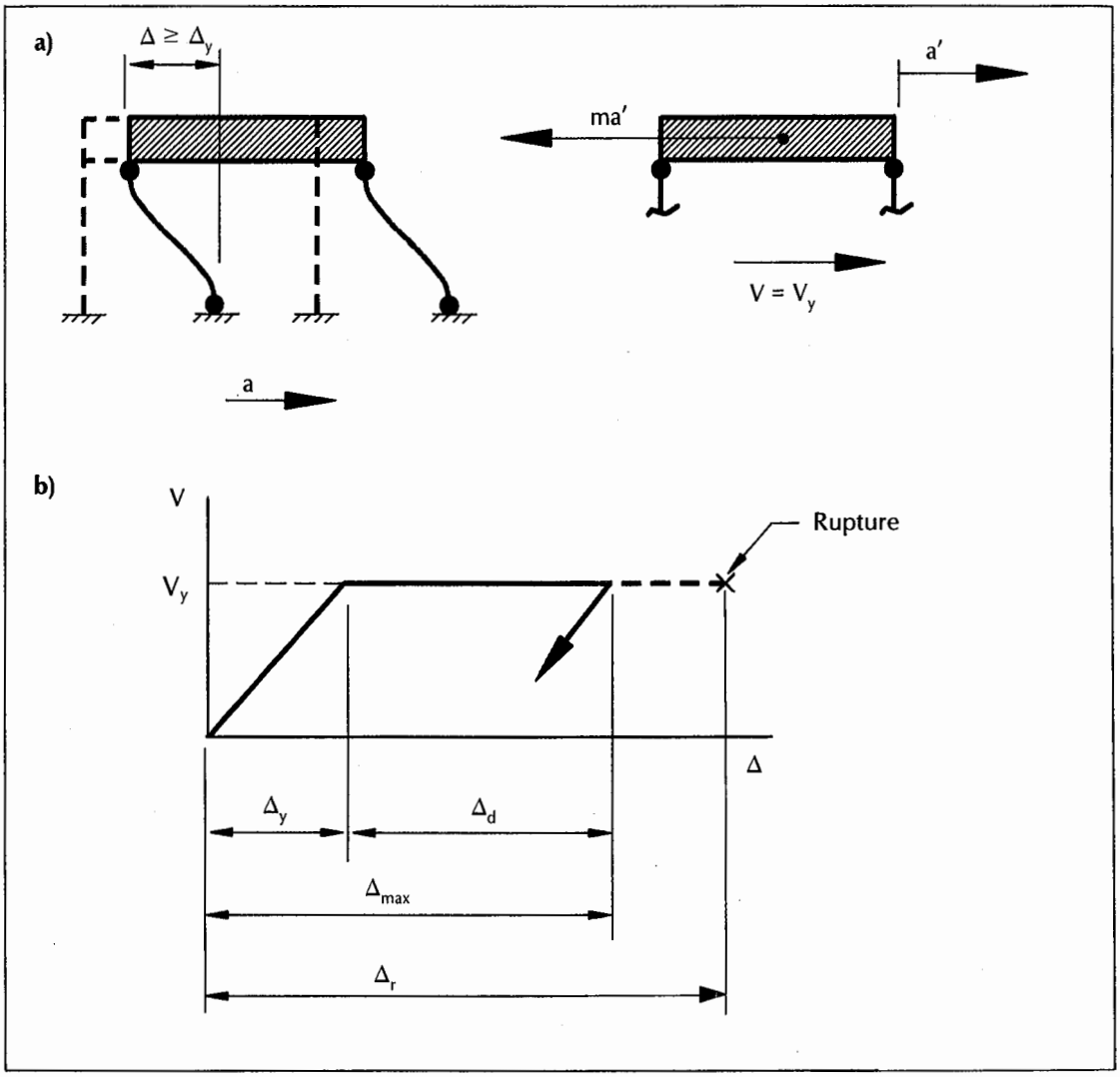

FIGURE 6. An elasto-plastic system subject to base acceleration (a); and unloading of an elasto-plastic system (b).

inelastic deflections can also contribute to significant P-Δ effects, which should be taken into account in the structural design.

Multi-Degree-of-Freedom Structures

The simple, one-story structures presented so far are examples of single-degree-of-freedom structures, or *simple oscillators* (see Figure 7). Their dynamic characteristics can be completely described in terms of a single frequency or period of vibration (which is simply a function of the mass and stiffness of the structure), and for damped systems by a single damping ratio.

The analysis of simple oscillators is useful for developing an intuitive feel for dynamic behavior. In addition, the responses of a number of simple oscillators can be added together to derive the response of a more complicated multi-degree-of-freedom system using the method of mode superposition (see Figure 8).

Any displacement pattern of a structure with N degrees of freedom can be expressed in terms of N modal displacement patterns, which represent possible free-vibration responses of the structure. Each modal displacement pattern has a fixed shape in which

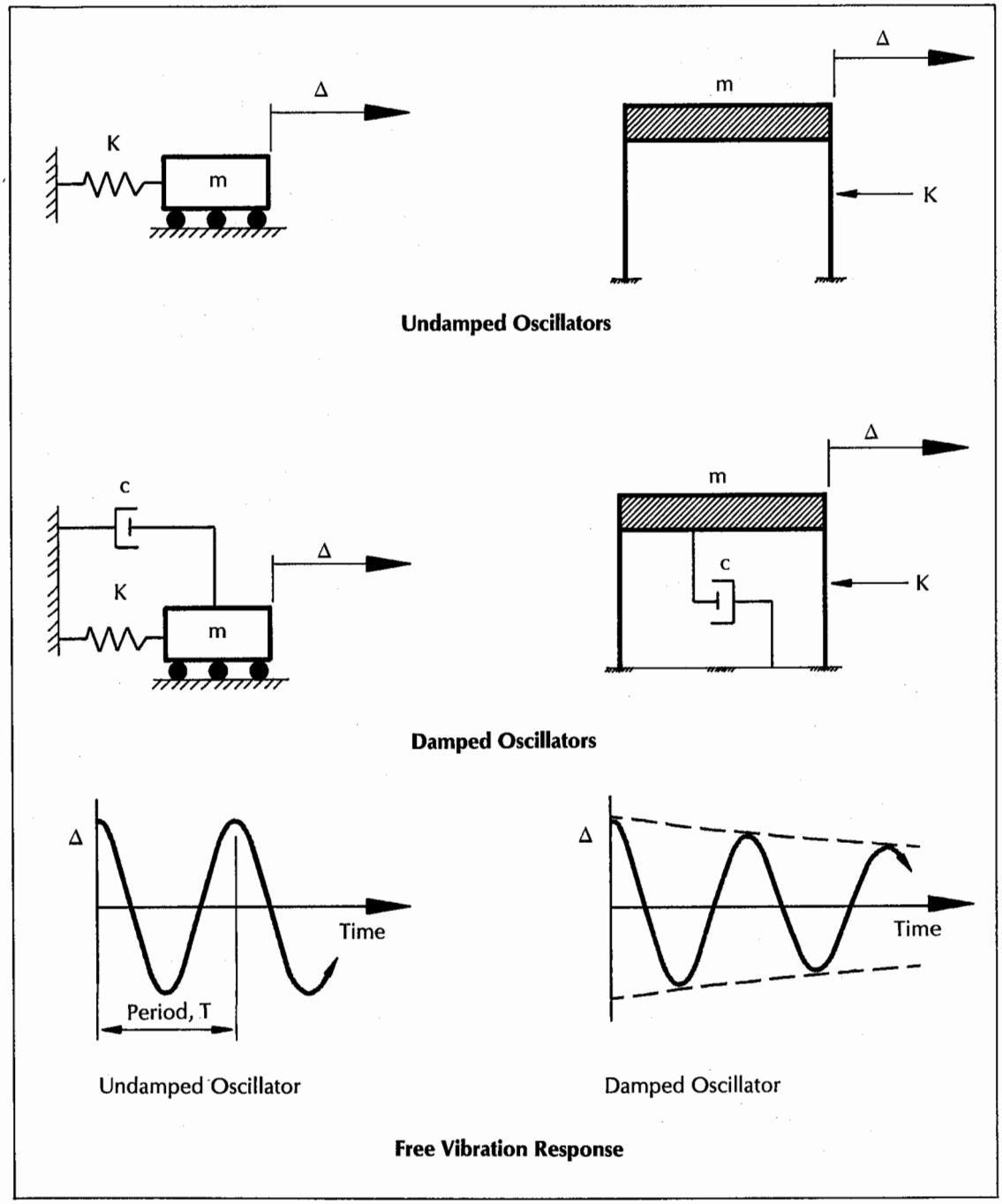

FIGURE 7. Illustration of typical simple oscillators.

the displacements of each degree-of-freedom remain in constant ratios. For any given dynamic loading, the response of the structure in each mode is completely defined by the mode shape and a single time-varying modal amplitude factor. In dynamic analysis, each mode of the real structure can be treated as an independent simple oscillator, with equivalent stiffness and mass that are functions of the actual stiffnesses and masses in the structure and the mode shape. The time-varying responses of all modes can then be summed

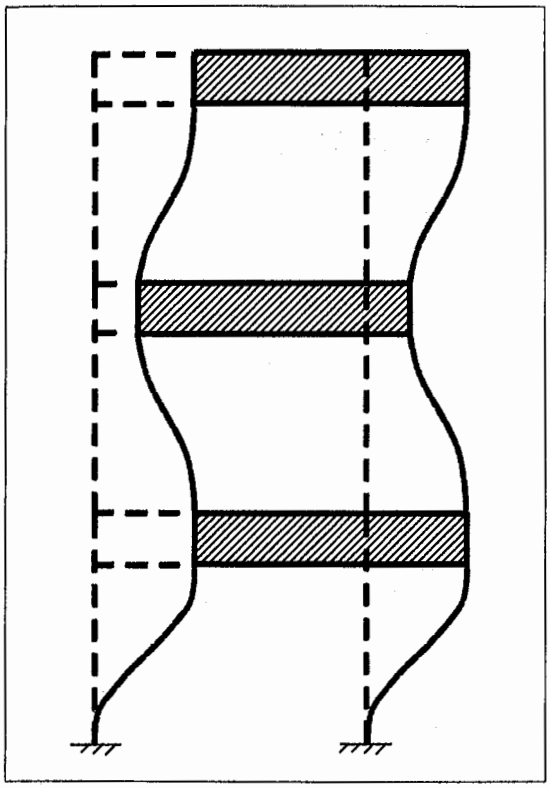

FIGURE 8. A multi-degree of freedom system.

to furnish the total response of the structure.[1,6,7]

Quite often, for complex structures, summing the earthquake responses of only a few critical modes is sufficient to produce a fair estimate of the total response of the structure.

Response Spectra

It is possible to compute the maximum response of a simple oscillator of any specified period and damping coefficient from an earthquake acceleration record. A response spectrum is the plot of the maximum responses of a large number of oscillators of different periods to the same dynamic input (the earthquake acceleration record). The response spectrum is a convenient way to represent maximum structural response to a dynamic loading. A response spectrum may be used for design by entering with the period of the structure and reading off the response, usually either the maximum displacement or the maximum elastic force in the structure. Maximum force is usually normalized by dividing the mass of the oscillator to produce a quantity having units of acceleration, and referred to as *pseudo* or *pseudo spectral* acceleration. Typical response spectra for earthquake loadings are shown in Figure 9.

A given response spectrum can be plotted for only a single ground motion time-history (earthquake acceleration record) and for only a single damping ratio. Typically, as in Figure 9, a family of curves is plotted for a particular earthquake acceleration pattern, one each for a range of damping values. Response spectra can also be plotted that take into account inelastic behavior. In this case, each curve also assumes some specific ductility ratio.

Spectra are often plotted on 3-way log paper as shown in Figure 10. With such a plot, it is possible to directly read either the maximum deflection or the maximum force (usually normalized to pseudo acceleration).

Actual earthquake response spectra typically appear jagged as revealed in Figures 9 and 10, because small differences in the fundamental (undamped, natural) period can lead to rather large differences in response to an earthquake motion. *Smoothed spectra* such as those shown in Figure 11 have been developed using statistical techniques to average out the irregularities so that the more large-scale influence of period on response can be readily observed.[2,8,9] Techniques have also been developed for constructing *design spectra* from a few basic properties of the anticipated ground motion.[2,9] An example of one such design spectrum is shown in Figure 12. Design spectra such as that shown in Figure 12 are made up of linear segments when plotted on 3-way log paper, and are derived by applying amplification factors to the maximum effective values of ground acceleration, velocity and displacement. The amplification factors are determined by a statistical analysis of the actual, computed response spectra. For a given set of amplification factors, there is a calculable probability that the maximum response predicted by the design spectrum will not be exceeded.

Amplification factors for elastic design response spectra are functions of the assumed damping level in the structure. Techniques have been suggested for constructing inelastic

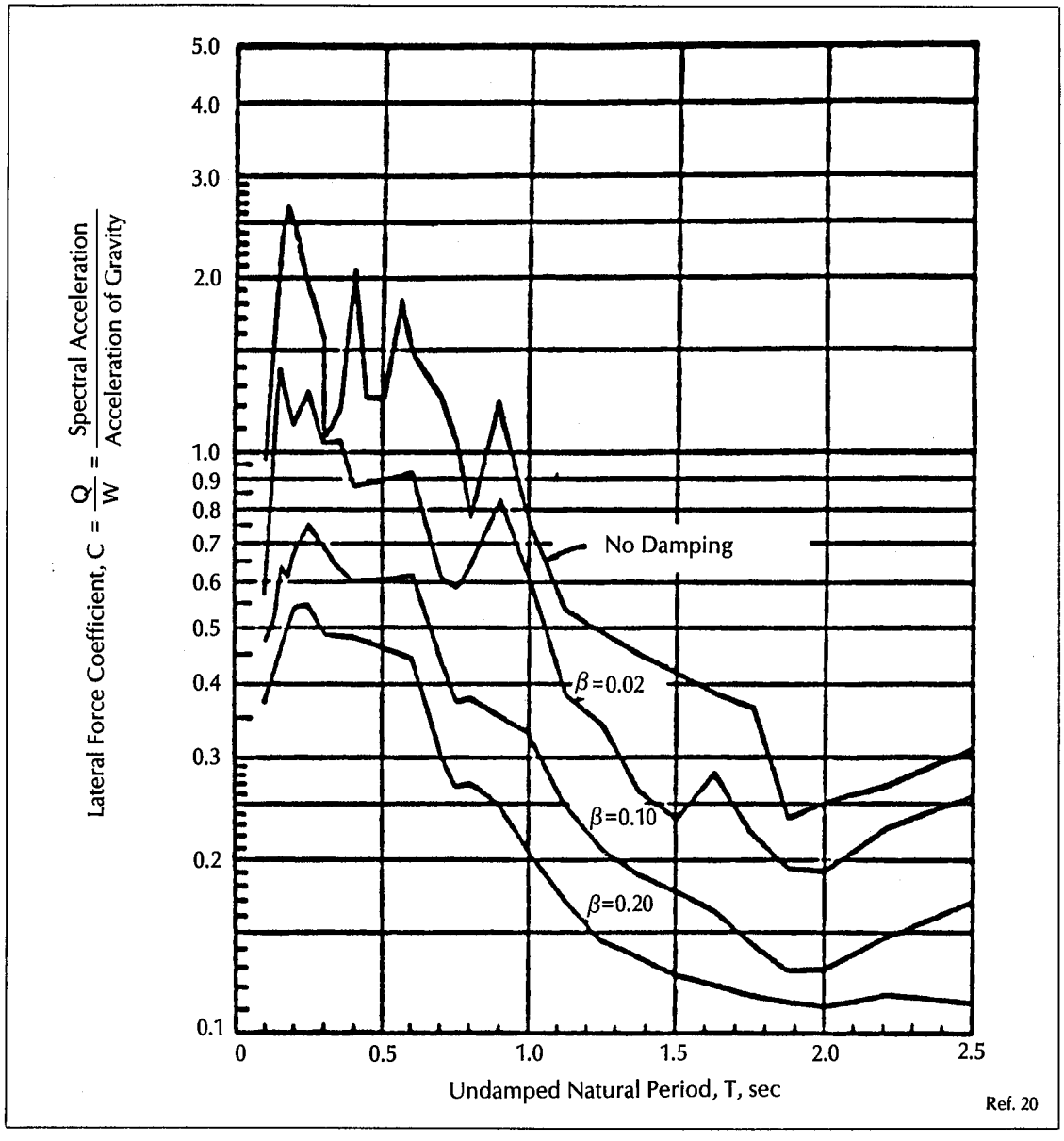

FIGURE 9. Typical earthquake response spectra.

design response spectra from the elastic spectra for assumed levels of available ductility.[2]

To use a response spectrum for the design of multi-degree-of-freedom structures, the designer enters the spectrum with the period of vibration and damping ratio of each significant vibration mode of the structure, and reads off the desired quantity: design force, or maximum deflection. These quantities are then converted into appropriate modal displacement and force patterns using the usual methods of dynamic analysis by mode superposition. However, since the maximum responses of the structure in different modes generally do not occur at the same time, the modal responses from the response spectrum are usually not summed directly. Instead, the modal responses are summed by approximate methods based on the principle of mode superposition.[1,2,6]

The principle of mode superposition

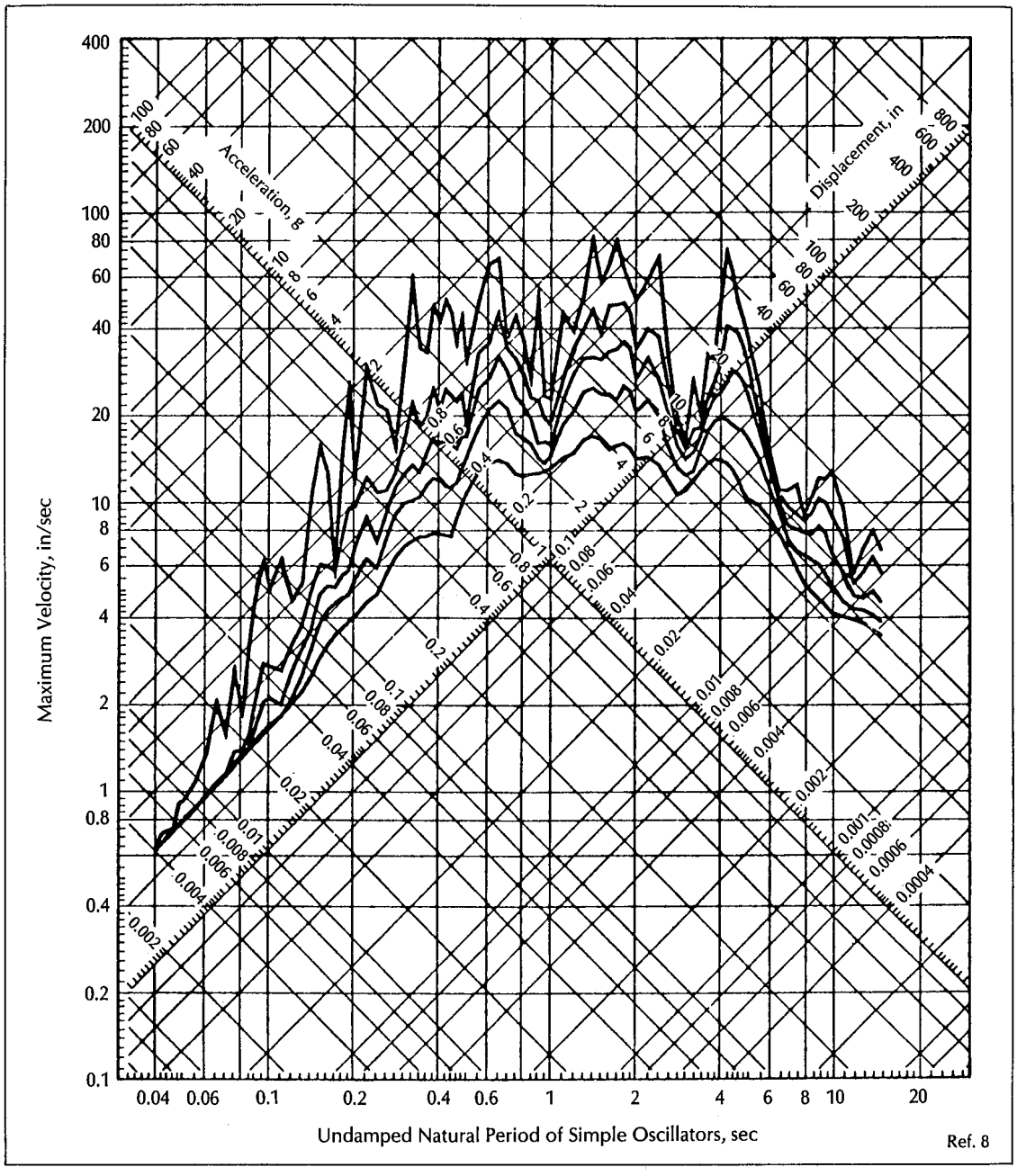

FIGURE 10. Earthquake response spectra on a 3-way log plot. These curves are for a different earthquake acceleration pattern from Figure 9. Each curve represents a single damping value.

strictly applies only to linear elastic structures. However, because of its convenience, the method is used often in conjunction with inelastic response spectra to estimate the response of structures in the inelastic range. This approximation is reasonably accurate for low levels of required ductility, providing the incidence of yielding is well distributed throughout the structure.[2]

The ground motion inputs to a design response spectrum (the maximum ground acceleration, maximum ground velocity and maximum ground displacement) may be taken from a single historical earthquake record.

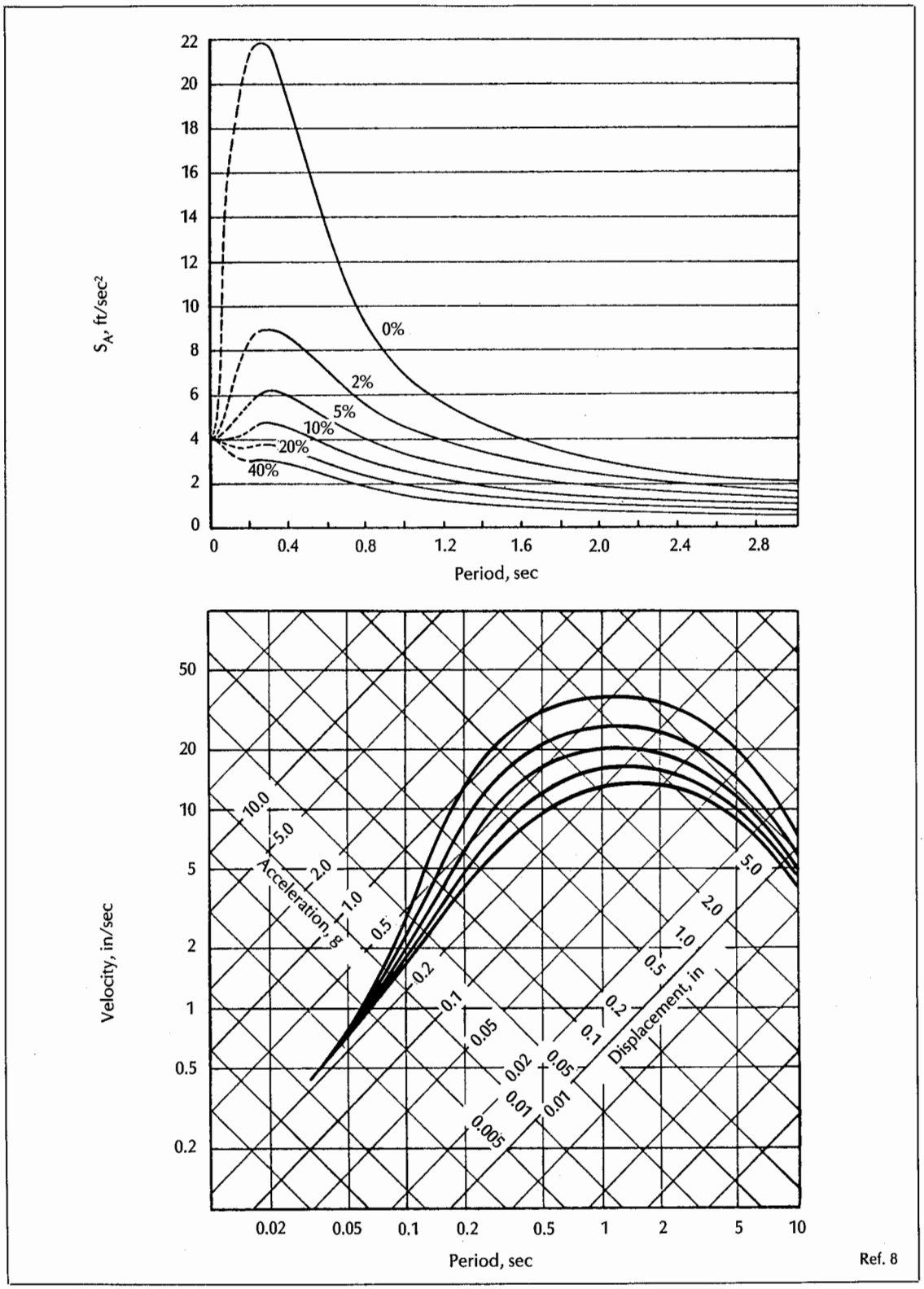

FIGURE 11. Smoothed earthquake response spectra.

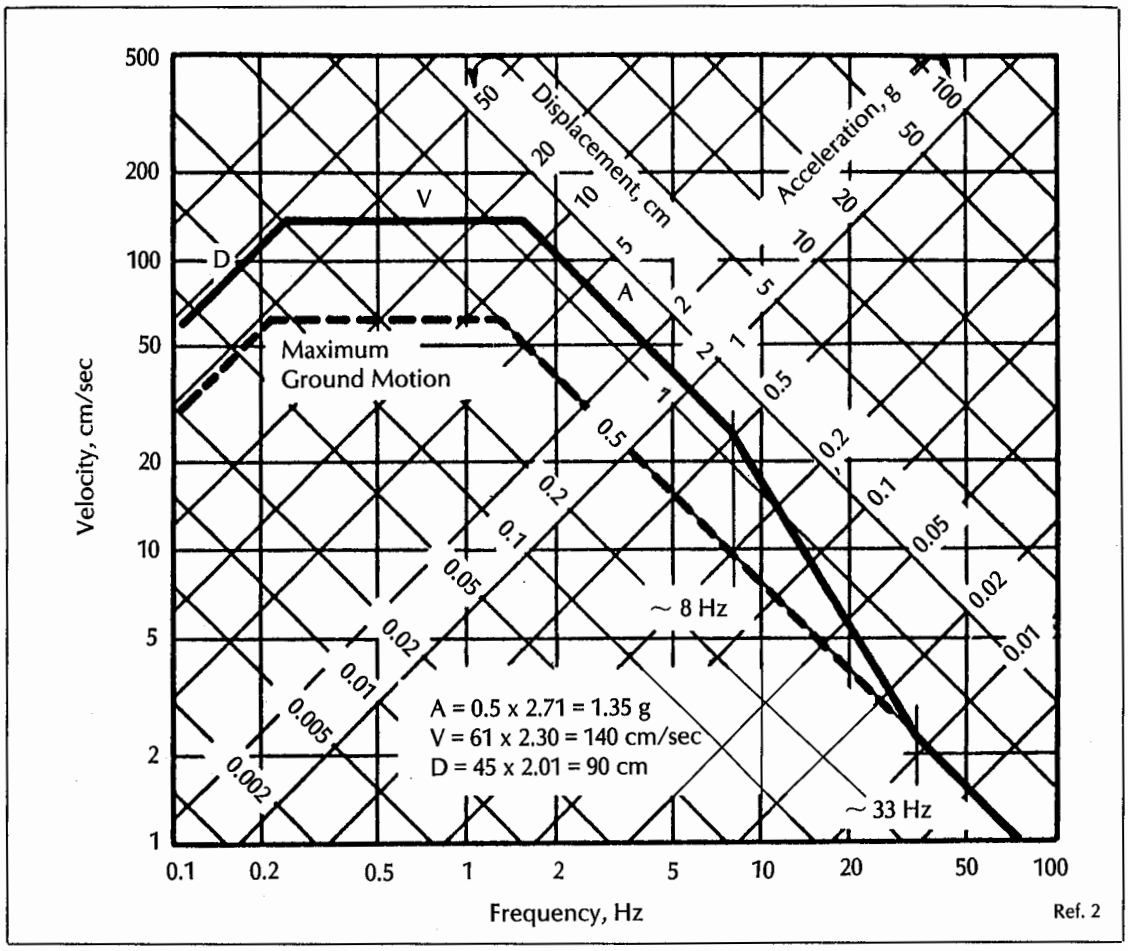

FIGURE 12. An elastic design response spectrum.

However, no specified earthquake will represent the most critical possible loading for all types of structures. For this reason, spectra are often plotted for composite *design earthquakes.* Such spectra attempt to combine the portions of the response spectra of various historical earthquakes that are most likely to cause high levels of damage to structures in each given frequency range. Therefore, they supply a much safer design than the spectrum of any specific actual earthquake.[2,8,10]

It is important to remember that a response spectrum must be plotted:

- for a specific earthquake ground motion (either an actual, historical earthquake or a composite "design earthquake");
- for a given level of damping; and
- for a given level of assumed ductility, if the spectrum is an inelastic response spectrum.

Response Spectra & Code Seismic Design Forces

Figure 13 shows the plots of two approximate design spectra derived from the ground motion characteristics of the 1940 El Centro earthquake in California. While the method used to plot the spectra follows the method that was suggested by Newmark and Hall,[2] the plots have been "delogged" since it is easier to view the relative values of the pseudo acceleration ordinates on a straight plot than on a 3-way log plot. The two spectra that have been plotted are an elastic design spectrum for 5 percent damping and the corresponding inelastic design spectrum for a ductility factor of 5 times the yield deforma-

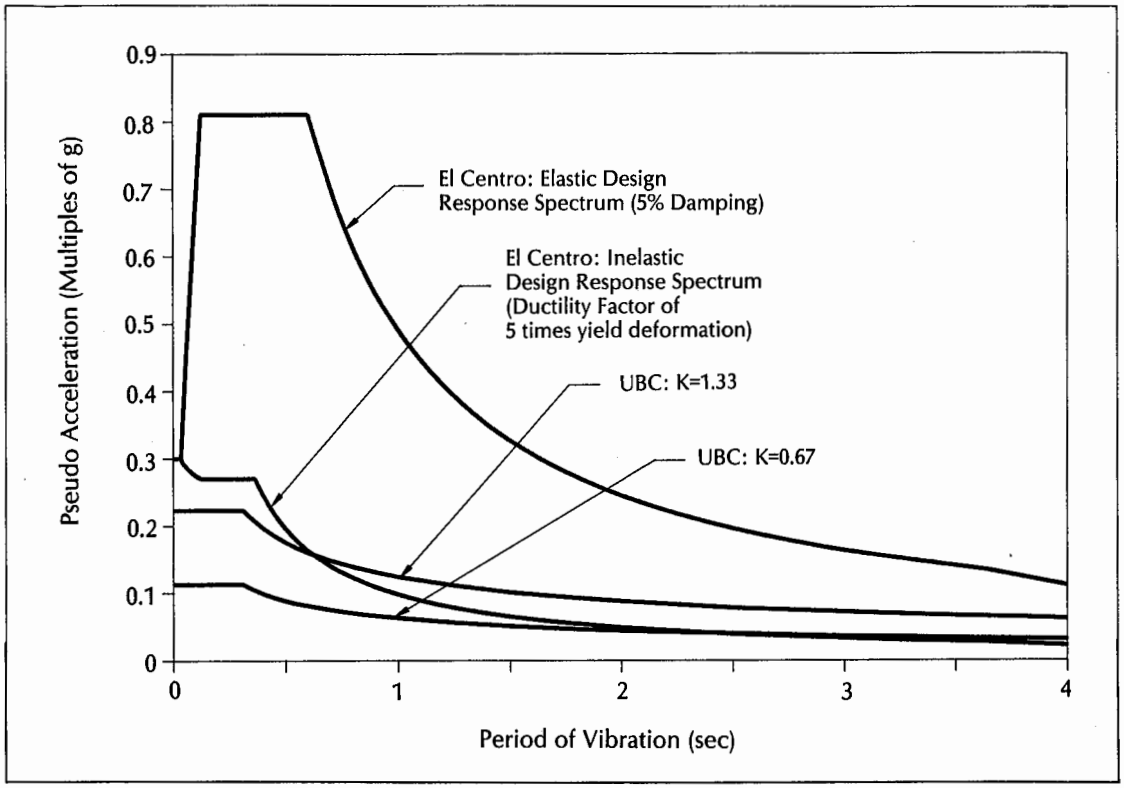

FIGURE 13. A comparison of UBC base shear (ultimate loads) with design response spectra.

tion. A 5 percent damping ratio is the level that might pertain, for example, to a reinforced concrete or a bolted steel structure within working stress levels, or a welded steel structure stressed to near the yield point.[2]

On the same figure, the pseudo accelerations implied by the 1985 Uniform Building Code (UBC) for *K* factors of 1.33 and 0.67 have been plotted. The UBC formula for base shear is:[3]

$V = ZIKCSW$

where:

Z = the zone factor, reflecting the likelihood of strong earthquake shaking at the site

I = the importance factor, determined by the intended function of the building

K = a factor reflecting the probable level of ductility, determined by the type of structural system

C = the seismic response factor, determined by the estimated elastic properties of the structure

S = a soil/structure interaction factor

W = the total weight of the building

Since the pseudo acceleration is the maximum shear in the structure divided by the mass and expressed as a multiple of *g*, the pseudo acceleration implied by the UBC base shear formula is simply derived by:

$PSa = ZIKCS$

In Figure 13, *Z*, *I* and *S* have been assumed to equal 1. *C*, as defined by the UBC, is a function of the period, *T*, specifically, $C = 1/(15*T^{-2})$. Because the design spectra represent forces at ultimate levels of stress, the curves based on the UBC have been multiplied by a load factor of 1.4. Typical safety factors used in practice for seismic design range from about

$(1.33 \times 0.6)^{-1} = 1.25$ for steel structures to 1.4 for concrete structures.[11,12] Therefore, the use of a 1.4 factor minimizes the difference between the UBC and the spectral forces.

Pseudo accelerations can be thought of as recommended design forces, expressed as a fraction of the dead weight of the structure. For any given period, *T*, the ordinate of one of the design response spectra yields the exact design force for a single-degree-of-freedom structure with a period equal to *T*. The ordinate also approximates the design force for a multi-degree-of-freedom structure with a fundamental period equal to *T*. The ordinate of the elastic response spectrum represents the maximum expected force that the structure would be required to resist if yielding were not permitted. The ordinate of the inelastic spectrum represents the resistance that would be required if yielding were permitted up to a ductility ratio of 5. The corresponding ordinates of the UBC curves indicate the minimum capacity, or resistance, that would be expected to be found in a box type structure and a ductile moment frame of the same period if they were designed in accordance with the UBC.

Two observations demand immediate attention when comparing the Code curves to the empirical design spectra. First, the general shape of the Code curves is not in particularly close agreement with that of the design spectra. The tails of the Code curves, which vary proportionally to $1/T^{0.5}$ are much flatter than the empirical curves, which vary with $1/T$ or $1/T^2$. Second, the Code forces are far lower than those given by the elastic design spectrum.

For example, for a moment frame building in California with a period of 2 seconds, the UBC would specify an (ultimate) base shear of 0.044 times the building's weight. The elastic response spectrum suggests that had the building been subjected to the El Centro earthquake and remained elastic, it might have experienced forces equal to about 0.24 times its weight, or more than 5 times the level of the UBC design forces. Similarly, an elastic analysis of a mid-rise concrete shearwall building, for which the fundamental period might be on the order of 0.3 to 0.5 seconds, would produce design forces 3 to 5 times those specified by the UBC.

Low code forces can be justified only if a high level of ductility is present in the structure. However, due to the shape of the Code curves, it is not possible to determine the exact ductility level assumed in the Code. Most notable and, perhaps, surprising to many designers are the high ductility levels that are obviously necessary even for $K = 1.33$ buildings.

Ductility Capacity in Structures

The determination of appropriate levels of ductility to assume in the design of complex structures is difficult and controversial.[2,5,13,14] Overall ductility depends, for example, not only on the ductility capacity of the individual structural members, but also on such factors as the sequence of plastic hinge formation in the structure, which in turn depends on the particular time-history of the loading. In fact, the common practice of assigning a single number to the ductility of complex structures is at best an approximation, even though it is one that is essential for seismic analysis using inelastic design response spectra. The theoretical shortcomings of this practice have been pointed out, but it is widely accepted as being adequate for many practical types of buildings.[2,5,14] Some specific suggestions have been made for typical ductility levels that can be expected in various types of structures. Representative values are 4 to 6 for carefully detailed concrete buildings; up to perhaps 8 for properly detailed steel structures.[2]

Ductility ultimately depends on the proper detailing of the structure, and in particular the joints and connections.[15,16,17,18] For a concrete structure, this detailing means such things as paying careful attention to minimum and maximum reinforcing ratios, thorough detailing of splices and anchorages, and confining concrete by closely spaced hoops or spirals in areas where inelastic behavior can be expected to occur. In a steel structure, members must be proportioned to avoid local buckling and joints must be stiffened to prevent stress concentrations that could lead to the premature fracture of welds. Connections that might not have sufficient

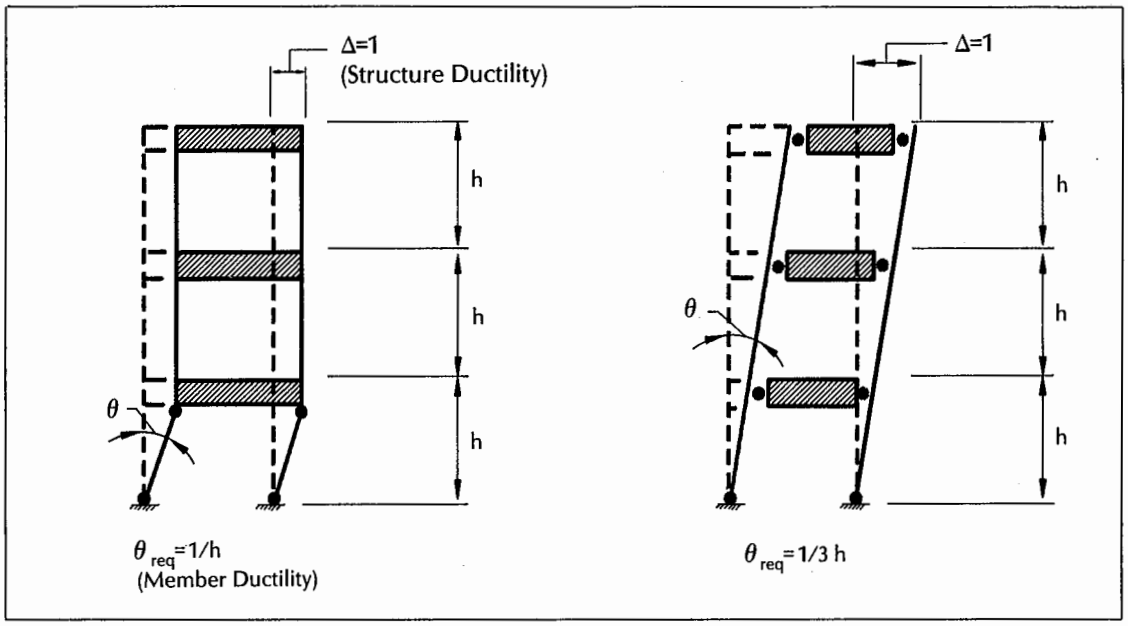

FIGURE 14. Lower member ductility requirements for a frame with plastic hinges in the girders.

ductility must be strong enough to force yielding to occur in the main members. Members subjected primarily to axial stress should ideally be redundant, so that the buckling of one or several members will not cause the collapse of the entire structure.

Code provisions mandating special detailing for elements of the seismic resisting system are thus generally intended to ensure that the required levels of ductility are present in the structure.

Proportioning of members can also influence the amount of available ductility. For example, a frame in which plastic hinges are allowed to form in the columns will require much higher member ductilities to achieve the same overall ductility than a similar frame in which plastic hinges are forced to occur in the girders (see Figure 14).[16,17]

The designer must realize that ductility requirements apply in a seismic zone even if wind forces control a particular design. The designer determines whether wind forces control by comparing the wind shears and moments induced in the building with those derived from code formulas for seismic load. However, those code seismic forces *assume* a certain level of ductility that will be attained only if the code detailing provisions, and other ductility-related provisions, are followed. If the required level of ductility is not obtained, the "correct" seismic design loading would be significantly higher, and it is very likely that wind loading would no longer control.

Conclusion

There is a clear need to provide for ductility in seismic design and, in particular, in designs based on code earthquake forces. Ductility is not an auxiliary requirement in seismic design, it is *a primary factor in determining the level of loading for which a building should be designed.* If codes did not require structures to be ductile, it would be necessary to design for forces that could easily be 4 or 5 times larger than those presently specified.

In principle, of course, it should always be possible to design structures to respond elastically to an earthquake, and therefore not require ductility. In seismic engineering literature, it has been traditionally assumed that designing a structure to remain elastic would never be economical because the required design force levels would be so high. This assumption may not necessarily always be true. In areas where seismic forces are

expected to be relatively low, reducing ductility requirements with a corresponding increase in design load may pose an economically preferable option.[19] However, even in such circumstances, there is a strong argument for maintaining some degree of ductility in structures in seismic areas as a buffer against the uncertainties inherent in seismic design.

Seismic loadings are probably the most highly uncertain loadings known to structural engineering. It is impossible to predict the maximum likely level of seismic excitation of a structure with any certainty. Ductile structures are more forgiving than non-ductile structures of mistakes in loading assumptions or in elastic analysis. Ductile structures can redistribute forces during local overloads where a non-ductile structure might collapse. For this reason, given the uncertainty of predicting seismic loads, some level of ductility should be provided in all buildings in seismic zones, no matter what level of force is used in design.

ACKNOWLEDGEMENTS — The author thanks Guy Nordenson, Kim Roddis and Alan Simon for their encouragement and their valuable criticism of the early drafts of this article; to Weidlinger Associates for encouragement and technical support; and to Frank Nigro for his expert CAD-drafting of the figures.

DAVID O. KNUTTUNEN received his B.S. in Civil Engineering from the Massachusetts Institute of Technology in 1978, and his Master's Degree from the University of California, Berkeley, in 1979. He has worked as a structural engineer in the Boston area since 1980 with Souza, True and Partners and, more recently, with Weidlinger Associates. Currently, he is taking some time off to work on some computer software development projects.

REFERENCES

1. Chopra, A.K., *Dynamics of Structures: A Primer,* Berkeley: Earthquake Engineering Research Institute Monograph Series, no date.

2. Newmark, N.M., and Hall, W.J., *Earthquake Spectra and Design,* Berkeley: Earthquake Engineering Research Institute Monograph Series, no date.

3. *Uniform Building Code,* Whitier, California: International Conference of Building Officials, 1985.

4. *Massachusetts State Building Code,* Boston: Secretary of State, Commonwealth of Massachusetts, 1986.

5. Mahin, S.A., and Bertero, V.V., "Problems in Establishing and Predicting Ductility in a Seismic Design," *Proceedings of the International Symposium on Earthquake Structural Engineering,* St. Louis, Missouri, August 1976.

6. Clough, R.W., and Penzien, J., *Dynamics of Structures,* New York: McGraw-Hill, 1975.

7. Biggs, J.M., *Introduction to Structural Dynamics,* New York: McGraw-Hill, 1975.

8. Housner, G.W., and Jennings, P.C., *Earthquake Design Criteria,* Berkeley: Earthquake Engineering Research Institute Monograph Series, no date.

9. Newmark, N.M. and Rosenblueth, E., *Fundamentals of Earthquake Engineering,* Englewood Cliffs, New Jersey: Prentice-Hall, 1971.

10. Bertero, V.V., Class notes for course CE 227 Design for Dynamic Loads, University of California, Berkeley, 1979.

11. American Institute of Steel Construction, *Manual of Steel Construction.*

12. American Concrete Institute, *ACI 318: Building Code Requirements for Reinforced Concrete.*

13. Bertero, V.V., "Strength and Deformation Capacities of Buildings Under Extreme Environments," in Pister, K.S., ed., *Structural Engineering and Structural Mechanics,* Englewood Cliffs, New Jersey: Prentice-Hall, 1980.

14. Biggs, J.M., Hansen, R.J., and Holley, M.J., Jr., "On Methods of Structural Analysis and Design for Earthquakes," in Hall, W.J., ed., *Structural and Geotechnical Mechanics,* Englewood Cliffs, New Jersey: Prentice-Hall, 1977.

15. Popov, E.P., "Seismic Behavior of Structural Subassemblages," *Journal of the Structural Division,* American Society of Civil Engineers, Vol. 106, No. ST7, July 1980.

16. Park, R., "Ductility of Reinforced Concrete Frames under Seismic Loading," *New Zealand Engineering,* Vol. 23, No.11, November 1968, pp. 429-435 (cited in Reference 10).

17. Paulay, T., "Deterministic Seismic Design Procedures for Reinforced Concrete Buildings," *Engineering Structures,* Vol. 5, No. 1, January 1983.

18. Paulay, T., "A Critique of the Special Provisions for Seismic Design of the Building Code Requirements for Reinforced Concrete (ACI 318-83)," *Journal of the American Concrete Institute,* Vol. 83, March/April 1986.

19. Gergely, P., "Earthquake Resistant Design of Concrete Structures in the Eastern United States," paper delivered at the ASCE Met Section lecture series, New York, copy received courtesy of G. Nordenson, Weidlinger Associates, 1986.

20. Veletsos, A.S., "Earthquakes and Their Effects — An Overview," *A Northeast Regional Seminar on Earthquake Fundamentals,* Earthquake Engineering Research Institute Seminar held in Boston, October 1985.