Foundation Considerations for the Expansion & Renovation of the Hynes Auditorium

Site and structural conditions as well as building code requirements often result in overwhelming design problems. One unique, but replicable, approach overcame these problems.

EDMUND G. JOHNSON &
DAVID A. SCHOENWOLF

THE NEW Hynes Convention Center was constructed from 1985 to 1987 by renovating and expanding the existing Hynes Auditorium. One floor was added above the existing two-story structure and a three-story addition was added to the north and east of the structure to provide a total floor area of 454,000 sq. ft., approximately twice the original floor space. *(See "Structural Renovation & Expansion for the Hynes Convention Center" on pages 63-74 for an accompanying discussion on the auditorium's structural expansion — Editor's note.)*

In order to accommodate the expansion/renovation, the capacity of the 20-year old pile foundations below the existing auditorium were investigated to verify whether they could carry the increased column loads. Based on in-situ load tests and other analyses, it was determined that the existing pile foundation system could be utilized even though the design loads on individual piles would be increased by 30 to 50 percent. However, for the northerly and easterly additions, new deep foundations were required. Conventional steel H-piles were selected to support the northerly addition. In order to overcome the many site and project constraints in the easterly expansion area, over 300 high capacity (up to 250 tons) drilled piles were installed using non-displacement techniques to depths of 150 to 170 feet through Boston's blue clay into bed-

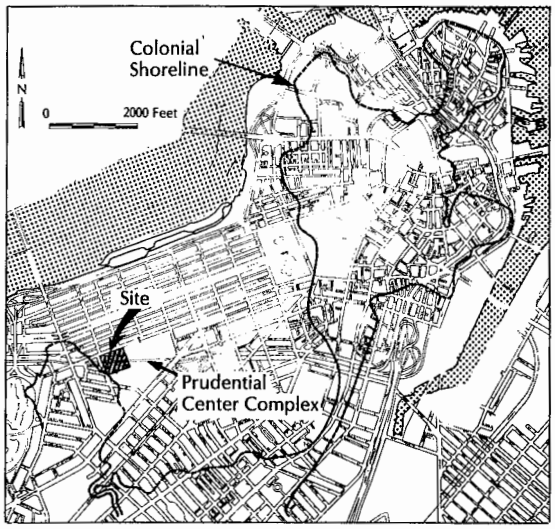

FIGURE 1. Site location.

rock. Over half of the piles were installed from work areas in the basement with as little as 10 to 14 feet of headroom. Other piles were installed from locations on top of the existing structure. Special rigs brought over from Europe were utilized by the contractor to install these innovative foundation piles. The installation of piles of this capacity, to these depths, under such limited headroom conditions was, at that time, unprecedented in the United States.

Site Conditions

As shown in Figure 1, the Hynes Auditorium is located in the Back Bay area of Boston and is part of the Prudential Center Complex. Topographically, the ground surface along the north side (bounded by Boylston Street) slopes gradually downward from west to east (from el. 30 to el. 25, Boston City Base[1]) and lies just outside the original colonial shoreline of the Boston Peninsula.

The auditorium, located on the corner of Boylston and Dalton Streets, abuts the Sheraton Hotel to the south and the Prudential Tower to the east (see Figure 2). A zone of two-story commercial/retail spaces known as Commercial Block C lies between the original auditorium and the Prudential Tower. The structures in this area were razed to street level to make room for the easterly expansion. Beneath the complex are one or two levels of parking. In addition, the Massachusetts Turnpike right-of-way passes under the Auditorium in a northwest-southeasterly direction. The Massachusetts Bay Transit Authority (MBTA) Green Line subway lies under Boylston Street just beyond the curb line.

Subsurface Conditions

Boring Program. The logs of borings drilled for the design and construction of the original Prudential/Hynes Complex were gathered and reviewed.[2,3,4,5] While these borings yielded useful data, there was insufficient information available regarding the bedrock in the areas of the proposed expansion. As a result, seventeen additional borings were drilled during the design phase of the new convention center.[6] All of these borings were 4-inch diameter holes from which standard 2-inch outside diameter split-spoon samples were recovered. A total of 385 lineal feet of NX-size rock core was recovered. In addition, a field testing program consisting of water pressure tests in the rock was conducted to determine the effective rock permeabilities.

Soil and Rock Conditions. The subsurface explorations revealed a soil and rock stratigraphy that is typical for the Back Bay area of Boston. Typical subsurface profiles through the project area are shown in Figure 3. The soil profile can be described in terms of six strata, which are listed below in order of occurrence from the ground surface downward:

- A surficial layer of fill, encountered only in those borings drilled in the service road in front of the previously existing Hynes Auditorium known as Ring Road. The thickness varied from 26 to 35 feet.
- A layer of organic silt, 2 to 3 feet thick, was also encountered only in the Ring Road area.
- Below the organic soils is an outwash sand deposit consisting of very dense, coarse to fine sand, with varying amounts of gravel and silt. This unit varies in thickness from 12 to 16 feet.
- A deep marine deposit underlies the entire site. This unit was found to range from 110 to 142 feet thick and consists of

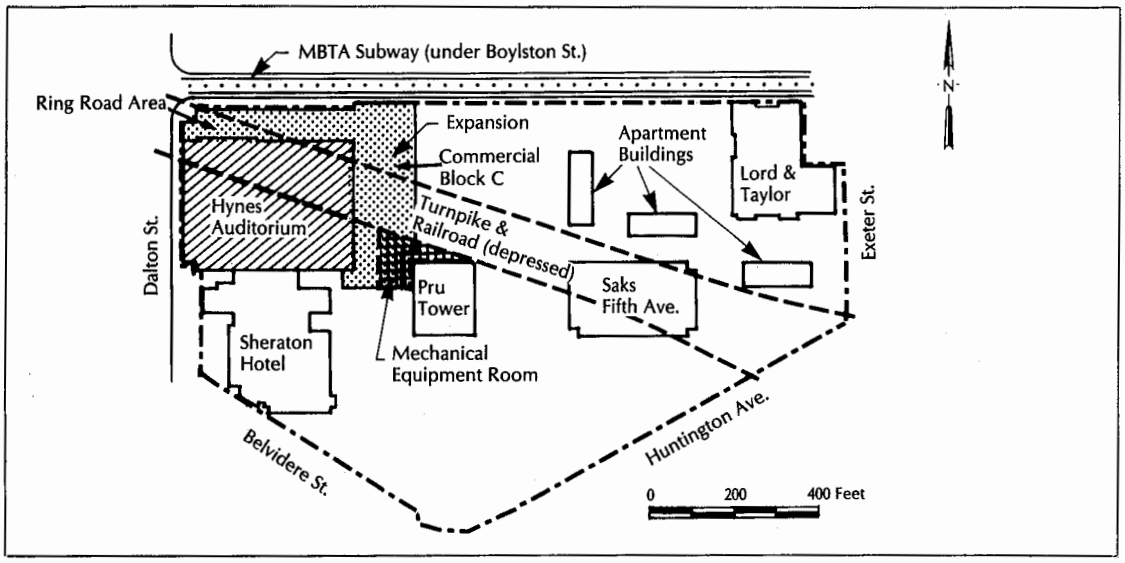

FIGURE 2. Plan location of the Hynes Auditorium within the Prudential Center Complex.

very stiff to very soft gray silty clay with numerous partings, seams and layers of fine sand (Boston Blue Clay).

- Below the marine deposit lies a very dense glacial till stratum that ranges in thickness from 0 to 13 feet.
- Bedrock below the site consists of Cambridge Argillite, with the top of rock level varying from el. -135 to el. -155. It is generally a fresh hard gray aphanitic Argillite, with moderately tight and healed, smooth, planar, closely spaced (2-inch to 3-foot) joints, frequently parallel to the moderately dipping (35° to 55°) bedding. The upper 2 to 9 feet is moderately to completely weathered. A diabase dike was cored in one boring.

Existing Foundations

A review of available design and construction documents for the Hynes Auditorium and the Prudential Center Complex indicated that the following types of foundations existed at the project site prior to the renovation (see Figure 4).[7] The original Hynes Auditorium and Prudential Center Complex were constructed using a 30-foot square column grid system. Column lines were numbered sequentially from west to east beginning with column line 8, and lettered from north to south beginning with column B.

The Original Hynes Auditorium. The original auditorium was bounded by column lines 8a, 23, E, and Oa. This structure, constructed in 1962, was two stories tall with one basement below grade. The basement existed only in the area south of the Massachusetts Turnpike/railroad right-of-way with the top of floor at el. 13.

With the exception of the northeast corner, the Hynes Auditorium was founded on concrete-filled steel pipe piles, 16 inches in diameter, with a ⅜-inch thick wall. As shown in Figure 3, the piles were driven to end-bearing in the glacial till or rock, with a design capacity of 120 tons each.[7] These pipe piles also supported the auditorium columns that existed over the turnpike and railroad alignments. A system of transfer girders existed between the underside of the Hynes entry-level floor and the top of the turnpike right-of-way to transfer the column loads to the piles.

The northeast corner of the auditorium and the northernmost wall of the turnpike right-of-way were founded on steel H-piles (HP 14 x 117 lb. sections) also driven to end-bearing in the glacial till or rock. Each H-pile had a design capacity of 120 tons.[7]

Expansion Area. The expansion was an L-shaped addition constructed on the eastern

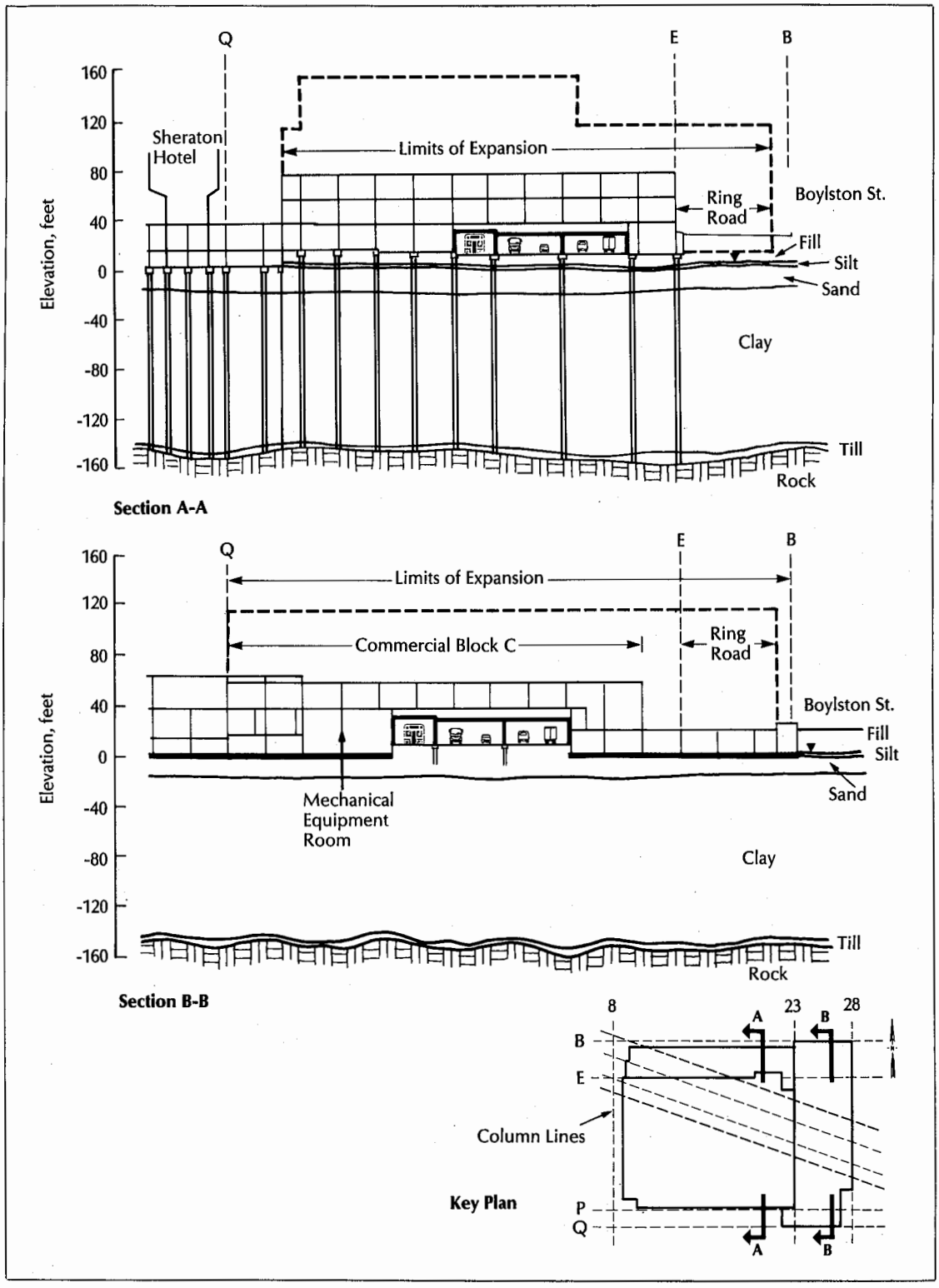

FIGURE 3. Sections through the Hynes Auditorium showing the structure and subsurface conditions.

and northern sides of the original Hynes Auditorium. On the east side, the former Commercial Block C area (bounded by column lines 23, 28, F and Q) had two levels above grade and one level below grade for parking. The garage extended below the Ring Road area north of column line F to column B. The top of the garage floor is at el. 3.0. As shown in Figures 2 and 3, the turnpike and railroad rights-of-way also extended below this area.

With the exception of the turnpike/railroad rights-of-way, the Commercial Block C area was founded on a concrete mat foundation, typically 3 to 4 feet thick, bearing on the natural sand overlying the deep clay soils (see Figure 3).

The structure over the turnpike/railroad corridor in this area was supported on 12-inch diameter concrete-filled thin shell ("Cobi") piles with an approximate design capacity of 50 tons.[7] These piles were approximately 25 feet long, bearing in the sand layer above the deep clay.

To the north, no previous structures or foundations existed in the Ring Road area between column lines B, E, 9 and 23 with the exception of the north wall of the turnpike corridor that was previously indicated to be supported on steel H-piles.

Construction Sequence

The construction sequence included the addition of one floor above the existing Hynes Auditorium structure and the three-story L-shaped addition. The addition extended to the north into the Ring Road area (80 x 420 feet) and to the east into Commercial Block C (150 x 480 feet). In order to accommodate the easterly expansion, the plaza and retail stores of Commercial Block C were razed to street level. The garage space below, however, remained. In the Ring Road area, where no structure previously existed, the top of the lowest level floor slab was at approximately el. 23, except in the Prudential Center Complex's mechanical equipment room where the floor slab top is now approximately el. 8.

Design Considerations for the New Foundations

Because of the addition of one story above the

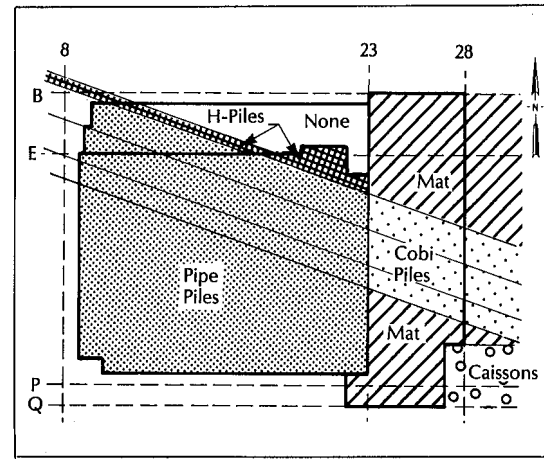

FIGURE 4. Types of existing foundations under the Hynes Auditorium and expansion area.

previously existing auditorium, studies were performed to determine if the existing piles could safely support the additional loads. The project's structural engineer indicated that the design loading on the existing pile foundations would increase as much as 50 percent (from 120-ton design capacity to 175 tons for the pipe piles and 180 tons for the steel H-piles). The investigations included:

- comparing the City of Boston Building Code allowable static design stresses for the piles installed in 1962 *versus* static design stresses for piles installed under the current state code, including evaluation of the allowable static stresses in the pile materials;[8]
- evaluating the installation records of the piles and performing computerized wave equation analyses to determine the theoretical end-bearing capacities of the piles as installed, taking into account the driving energy and penetration resistance of the bearing stratum; and
- performing an in-situ examination of piles at four column locations to determine their condition and performing in-situ field load tests on two piles (one pipe pile and one steel H-pile) to determine their allowable capacity.

Based on allowable stresses on the cross-

TABLE 1
Summary of Wave Equation Analyses

Pile Type	Hammer Type/ Energy	Pile Length (Feet)	Final Penetration Resistance* (Blows per inch)
Steel Pipe (16 in. diameter x ⅜ in. wall)	Vulcan OR 30,225 Ft-Lbs.	135 to 180	40
Steel Pipe (16 in. diameter x ⅜ in. wall)	Vulcan ORR 37,375 Ft-Lbs.	135 to 180	30
Steel H (HP14 x 117)	Vulcan 010 32,500 Ft-Lbs.	135	7

*The final penetration resistance required to achieve the 120- ton design capacity.

sectional areas of the piles as allowed by the City of Boston Building Code at the time of their installation in the early 1960s, the original design capacity of both the 16-inch diameter x ⅜-inch wall concrete-filled steel pipe piles and the HP 14 x 117 section H-piles was limited by the designers to 120 tons.[7] However, the current Commonwealth of Massachusetts State Building Code permits higher static stresses.[8] The current maximum allowable capacities of the pipe piles and H-piles are 183 and 217 tons, respectively. Therefore, the proposed design loading would satisfy the static stresses allowed by the current state code.

In order to better evaluate the load increase on the existing piles, the capacity of the piles based on dynamic methods of analyses was also studied. The pile capacity as determined by dynamic methods is a function of the amount of energy with which the pile is driven to achieve a certain final penetration resistance in the bearing stratum. Computer-aided wave equation analyses were utilized. The wave equation analysis is a numerical computer solution that employs a finite-difference method to study wave propagation in a pile during driving. Unlike conventional dynamic pile driving formulas that are based on the theory of Newtonian impact of two concentrated masses, wave equation analyses present models of wave propagation in a linear elastic element when impacted by a concentrated mass that accounts for variations in hammer characteristics, cushion materials, pile properties and soil types. The results of the wave equation analyses are shown in Table 1.

Based on the original Hynes Auditorium contract specifications, all piles were required to be driven to a final penetration resistance of at least 20 blows per inch (bpi) for the last 5 inches, using the pile hammers listed in Table 1. The field installation records indicated, however, that the pipe piles were driven to virtual refusal. Therefore, based on the results from the wave equation analyses, it appeared that the piles were driven with enough energy to achieve the original 120-ton design capacity in end-bearing. Any additional capacity due to skin friction was not considered in this analysis.

To confirm that the piles could carry the load increases with an adequate factor of safety, one load test was performed on a representative pipe pile and one on a representative steel H-pile. The load tests were conducted in accordance with the procedures outlined in the current state building code to twice the proposed design load.[8] As shown in Figures 5 and 6, the load tests confirmed that

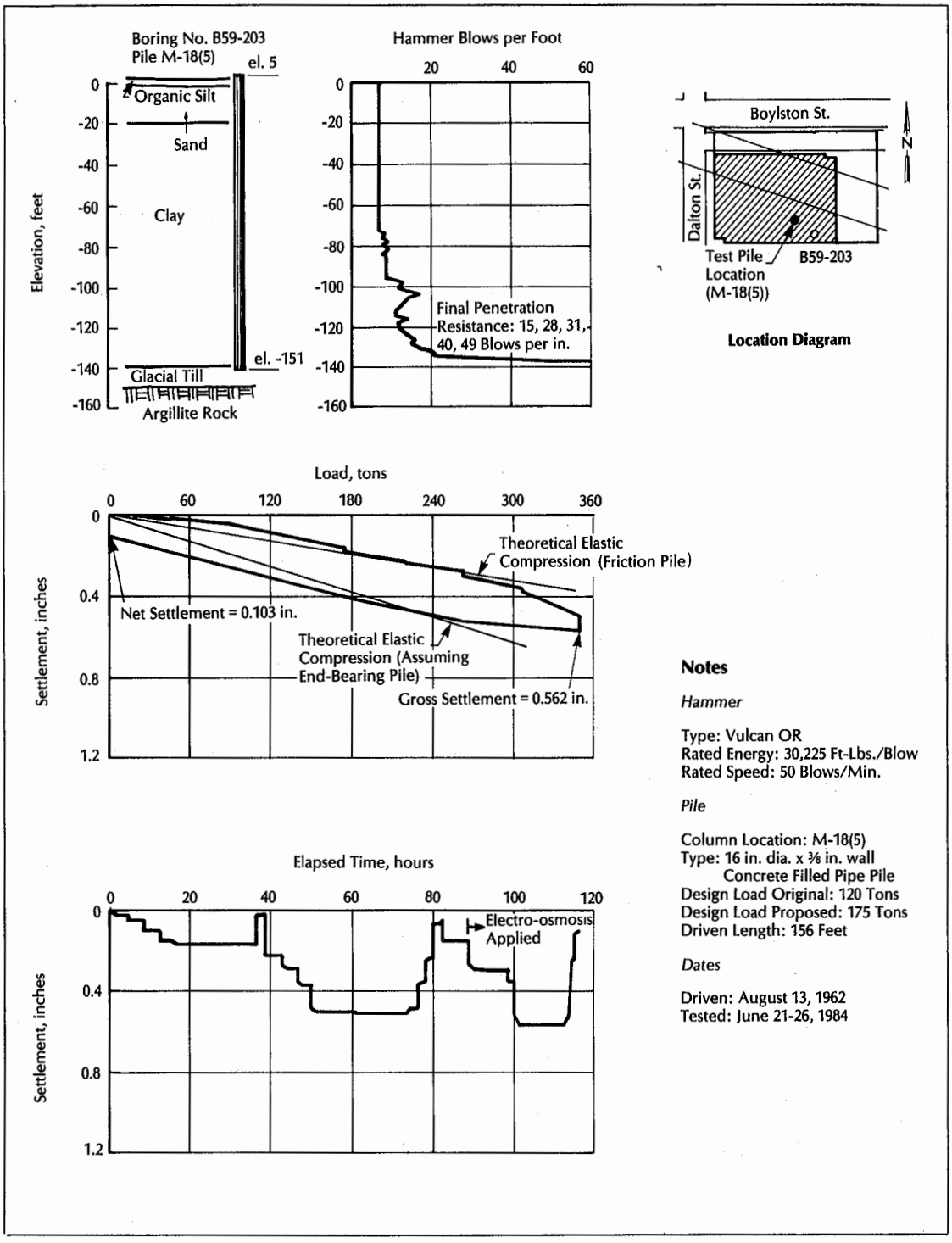

FIGURE 5. Load test results for the concrete-filled steel pipe pile.

the existing pile foundations could carry the increased loading with an adequate factor of safety and that deflections would be tolerable. With reference to the data plots, the deflection curve closely follows the theoretical elastic compression slope for a friction pile, indicating

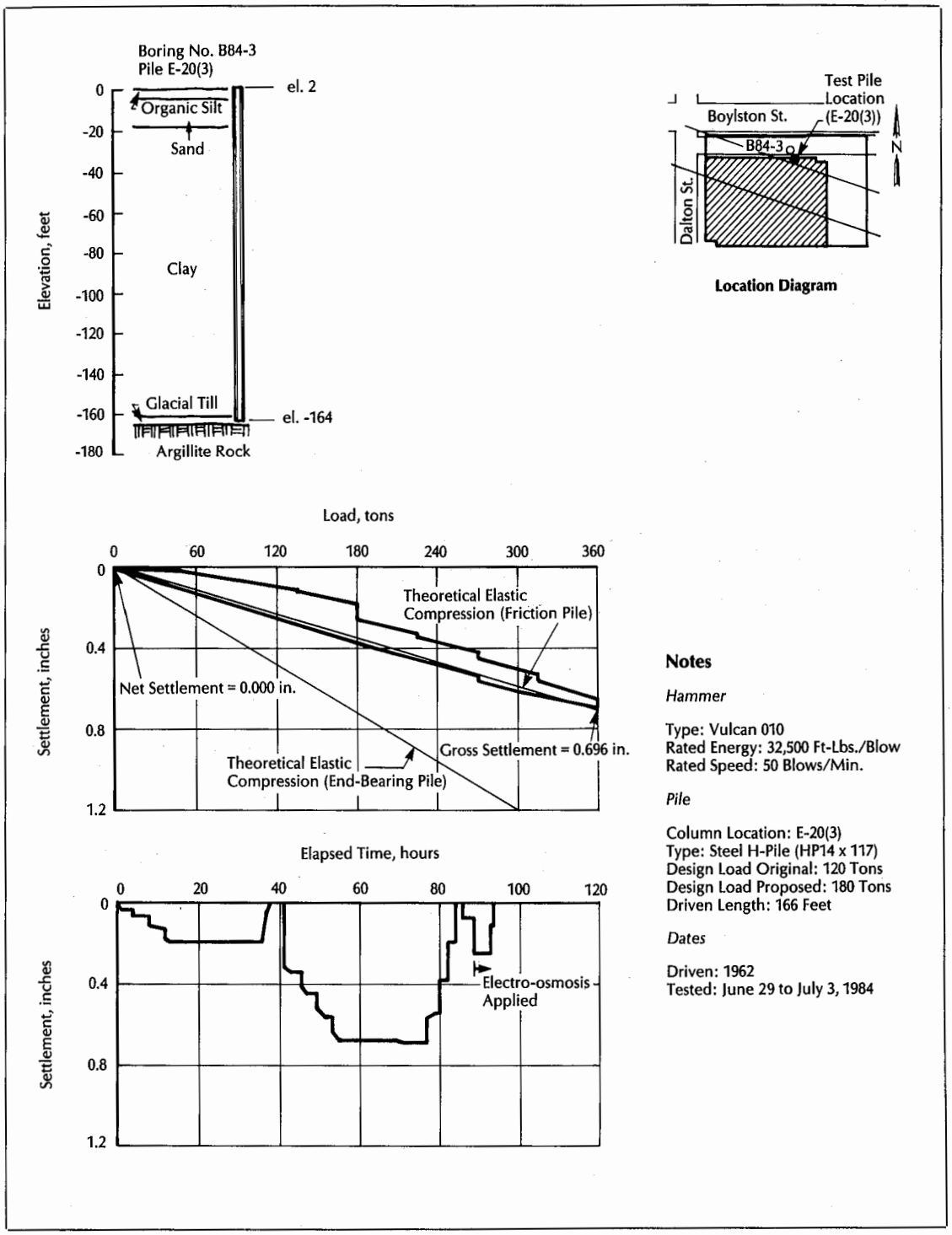

FIGURE 6. Load test results for the steel H-pile.

that most of the capacity was developed in skin friction in the clay. Only a small portion, if any, reached end-bearing in the rock for either pile.

In an attempt to reduce the skin friction, a unique feature of these load tests was the

application of the electro-osmosis phenomenon.[7] This procedure involved the transport of pore water through soil under the influence of an electric potential. The purpose was to induce pore pressure build-up around the circumference of the test piles, thus reducing skin friction in the clay layer and maximizing the test load reaching the bearing stratum.

After the pile settlement under the design load stabilized, electro-osmosis was applied by connecting the positive lead of a diesel-powered electric welder to the test pile while the negative lead was attached to two adjacent piles. An electric potential gradient was then established between the negatively and positively charged piles. Negatively charged water particles were drawn to the positively charged piles due to the electric potential. This movement induced a pore pressure build-up around the test pile circumference, thus reducing the skin friction in the portion of the pile embedded in the clay. Based on assumed values of the electro-kinetic properties of the underlying soils, it was determined that the welder would provide sufficient voltage and current to initiate the electro-osmosis phenomenon.

For the pipe pile, electro-osmosis was applied for a period of six hours while the test load was maintained at the design load and settlement measured. The voltage was turned off while the pile was then loaded to twice design load. The twice design load increment was held for 13 hours; electro-osmosis was then applied for a period of approximately six hours. The application of electro-osmosis increased the settlement of the pile butt by approximately 0.05 inches (an approximately 10 percent increase) at twice the design load (see Figures 5 and 6).

For the H-pile, electro-osmosis was attempted for one hour while the test load was at the design load. However, there was no observed effect, presumably due to equipment problems. An evaluation of current pile capacity and future increased loading required an assessment of the effects of corrosion since installation some 20 years ago. Possible sources of pile corrosion included:[9]

- the existence of corrosive soils such as organic silts and peat that underlie the site;
- horizontal stray electric currents from nearby sources of direct electric current (the MBTA subway tunnel); and,
- vertical galvanic or "long line" currents caused by potential differences along individual piles due to soil resistivity variations and/or soil aeration differences. Also, long line currents can be established between a pile and other buried metal objects with dissimilar metal properties (a buried copper pipeline, for example).

Unless the piles are adequately protected, these factors can have a deleterious effect on the structural capacity of the piles. Therefore, as part of the initial investigation, the pile protection measures that were adopted in the original design and construction were determined from available documents. In addition, field observations and measurements were made to assess current pile conditions.

The original Hynes contract drawings and specifications indicated that the pile protection system consisted of:[7]

- The upper section of each pipe pile was coated with a protective coating consisting of heavy duty, chemically resistant, thermo-setting resin of coal tar epoxy at least 18 mils thick extending to a depth of at least three feet into the underlying clay stratum.
- The H-piles were also coated with coal tar epoxy as described above. In addition, two 150-lb. zinc anodes were attached to each flange at least one foot below the bottom of the concrete pile cap.

The coal tar epoxy on the pipe piles minimizes corrosion by protecting the surface of the pile from direct contact with corrosive soils such as the organic silts. The anodes on the H-piles are "sacrificial" and serve to prevent corrosion of the piles since they will release electrons to a stray current flow more readily than the host piles.

In addition to these direct protection systems, the piles may have been protected indirectly by the shielding effects from various metallic subsurface barriers such as the Pru-

dential Tower foundations, perimeter steel sheeting still remaining below ground and other metallic underground objects directly attached to the building superstructure. Shielding was used as a means of corrosion protection in the Prudential Tower foundations.[7,9] A row of H-piles was installed around the perimeter of the drilled-in caissons supporting the tower to act as a shield against stray electric currents.

During the early phase of the project, test pits were excavated to confirm the condition of the piles. Visual observation of exposed portions of the piles indicated that the pile surfaces were indeed coated with a protective material, assumed to be the coal tar epoxy. The epoxy coating was found to be intact on each pile surface and was generally well bonded to the underlying steel. No areas of exposed metal were observed. In areas where the steel was exposed underneath the epoxy in order to observe it, the steel appeared clean and bright and showed no signs of deterioration. Visual examination of the anodes on the H-piles indicated that they appeared to have experienced very little loss of material since their installation.

Based on these evaluations that included two full-scale load tests conducted in accordance with the procedures outlined in the current state building code, it was concluded that the existing piles could carry the new design loads with an adequate factor of safety. Therefore, no new or supplemental foundations were required below the existing structure.

Expansion to the North. No foundations previously existed within this area. The miscellaneous fill and organic deposits did not have adequate strength or density to provide direct support of the expansion on shallow foundations. Therefore, it was recommended that the structure be supported by deep foundation elements such as piles. Prior to the start of construction in this area, a representative H-pile was installed and satisfactorily load tested to twice the design load capacity using load test procedures outlined in the state building code.

In order to minimize disturbance to the clay soils that would have been caused by displacement piles, and in order to provide a pile type of similar capacity to those installed for the existing Hynes, steel H-piles (HP 14 x 117 lb. section) driven to end-bearing in the glacial till or rock were recommended.[10] A design capacity of 217 tons per pile was also recommended, which is the maximum gross allowable design loading according to the current state building code. In order to protect the new piles from corrosion, they were coated with coal tar epoxy similar to the coating on the steel pipe and H-piles that currently existed under the Hynes Auditorium.

Expansion to the East. The design of the new convention center included a column-free auditorium to be constructed within the space previously occupied by Commercial Block C over the turnpike/railroad corridor. Geotechnical engineering analyses indicated that the major new column loads (up to 2,000 kips) within and adjacent to the turnpike corridor beneath this area could not be accommodated by the existing mat or Cobi pile foundations without excessive total and/or differential settlement. In addition, a circular rotunda on the north side of the turnpike required new columns at locations that did not coincide with the existing columns. The mat foundation could not accommodate these new columns. Therefore, a deep foundation system was also required in this area.

However, there were specific project and site development restrictions that influenced the selection of a deep foundation system for expansion in this area:

- Installation of driven piles may cause disturbance to the clay and subsequent settlement of adjacent soil bearing foundations.[10] Since the immediately adjacent Prudential Center garage was supported on a soil-bearing concrete mat foundation, driven piles were not considered to be an option. Drilled pile units were considered to be the most feasible option, provided there would be no erosion of the underlying sand stratum below the mat and turnpike roadway.
- The garage on the south side of the turnpike was to remain a garage after construction. Therefore, no new columns could

be constructed in this area. The deep foundations had to be installed around the perimeter and as close as possible to the existing columns; the columns would then be enlarged to transfer the load to the piles. The diameter of the foundation units had to be such that the center line of the pile was no further away than 12 inches from the face of the existing column.

- The foundation units had to be installed in the median strips of the turnpike and railroad without interfering motor vehicle and railroad traffic. Units also had to be installed in the mechanical equipment room of the Prudential Center Complex without disrupting services to the tower and other buildings. These spaces would remain after the expansion was complete. Direct rig access into these areas was not possible. The foundation units had to be installed from the floor level above these areas.
- The rigs, therefore, had to be light enough to operate from the level of the Prudential Plaza within Commercial Block C over the turnpike right-of-way and above the mechanical equipment room of the Prudential Center Complex without additional support from below and still have enough power to drill through 110 to 142 feet of clay and into rock.
- In order to meet the project schedule, the Massachusetts Convention Center Authority (owner of the building) decided to install the foundation units in the Commercial Block C area under an early foundation contract. As a result, only limited access was available for equipment to install foundations in the expansion area. The installation rigs had to be small enough to work in spaces with only 10 to 14 feet of headroom. Over 50 percent of the foundation units had to be installed in this low headroom space.
- A minimum capacity of 175 tons per unit was found to be most efficient to support the new design loads.

It was concluded that conventional driven piles or drilled caissons were not feasible. Drilled piles such as mini-piles, pin-piles or micro-piles with a maximum outside diameter of 13.5 inches and socketed into rock appeared to meet the foundation construction constraints. Piles of this diameter, with a capacity of 175 tons, drilled to depths of 150 to 170 feet and socketed into rock from a limited headroom working area had never before been attempted in the United States. Therefore, prior to preparing the contract documents, a test pile program was undertaken to demonstrate that the proposed foundation system was technically feasible and constructible.

Drilled Pile Test Program

During the fall of 1984 the Massachusetts Convention Center Authority sponsored a field installation and load testing program to determine the feasibility of installing deep drilled piles to satisfy the deep foundation system restrictions. Since the Hynes Auditorium was still occupied, piles were installed in the Ring Road area and in accessible portions of the Prudential Center Garage north of the Massachusetts Turnpike. The program required that the pile design be developed and proposed by the contractor in accordance with the minimum design criteria established in the contract documents. The contractor was required to submit a design for both cased and uncased piles, utilizing the contractor's own equipment and procedures. The design criteria included:

1. A design capacity of 100 to 175 tons.
2. Maximum outside diameter of 13.5 inches.
3. Design capacity to be developed in a rock socket formed in the fresh to slightly weathered Argillite bedrock, based on an allowable stress in the rock socket of 200 lbs. per sq. in. (a minimum rock socket depth of 10 ft. was required).
4. Piles could be cased, or uncased, designed in accordance with the minimum criteria (allowable design stresses are in accordance with state code Section 739.0):[8]

For *cased piles* the following minimum design criteria were established (see Figure 7):

- A maximum allowable stress on the steel

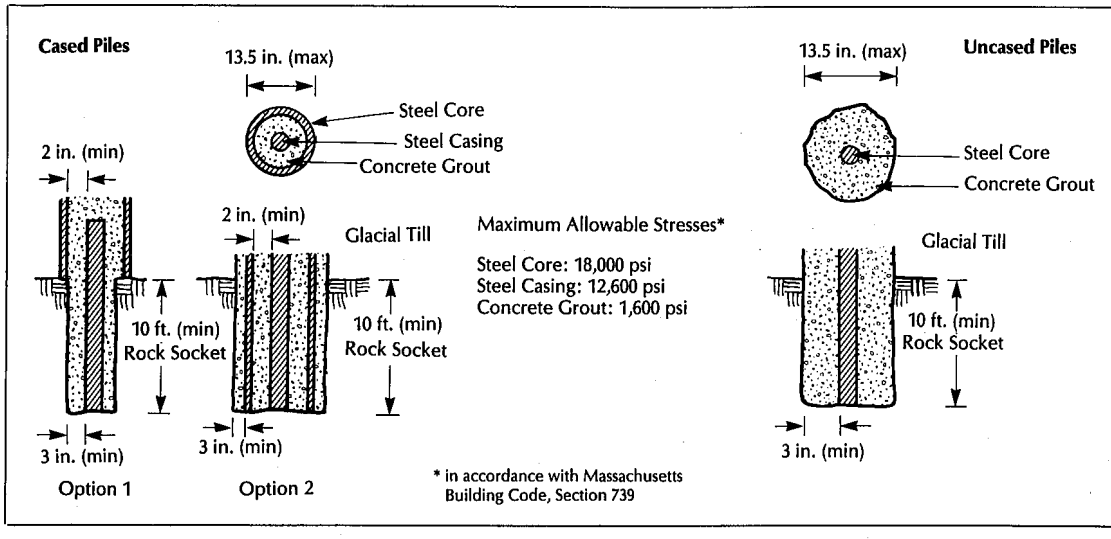

FIGURE 7. Recommended design criteria for drilled-in piles.

casing of 35 percent of the minimum specified yield strength, but not exceeding 12,600 pounds/square inch (psi) on the area of the steel pipe. (No requirement for corrosion protection.)

- A maximum allowable stress in the steel core, if used, of 50 percent of the minimum specified yield strength, but not exceeding 18,000 psi on the area of the core steel.
- A maximum allowable stress on the concrete fill of 33 percent of the 28-day compressive strength, but not exceeding 1,600 psi on the area of concrete.
- A minimum thickness of concrete in the annulus between the steel core and steel casing of two inches, and outside the steel core in the rock socket of three inches.

Assuming the steel casing and concrete were adequately sized to carry the full design load, core steel was not required above the rock socket (see Figure 7). Within the rock socket, either the steel casing or a steel core section could extend to the bottom, surrounded with cement grout.

Since the piles would be installed from areas with limited headroom, the piles would have to be drilled and installed in sections. Therefore, it was also required that the mating ends of the steel core and/or casing sections be spliced so that they could safely withstand the stresses to which they may be subjected. Each steel core splice and casing splice was required to develop the full compression strength of the section.

For *uncased piles* the following minimum design criteria were established (see Figure 7):

- A maximum allowable stress on the steel core of 50 percent of the minimum specified yield strength, but not exceeding 18,000 psi on the area of the core steel.
- No load carried in the concrete in the overburden soils; all load to be carried in the steel core above the rock socket. A minimum concrete 28-day strength of 4,000 psi was required in the rock socket to transfer the load from the steel core to the rock.
- A three-inch minimum thickness of concrete over the core steel in soil or rock.
- The steel core to be centered in the pile and extend through the concrete to the bottom of the rock socket.

As for the cased piles, it was recommended that the mating ends of the steel core sections be spliced so that they could safely withstand the stresses to which the steel may be subjected. Each core steel splice also had to be able to develop the full compressive strength of the section.

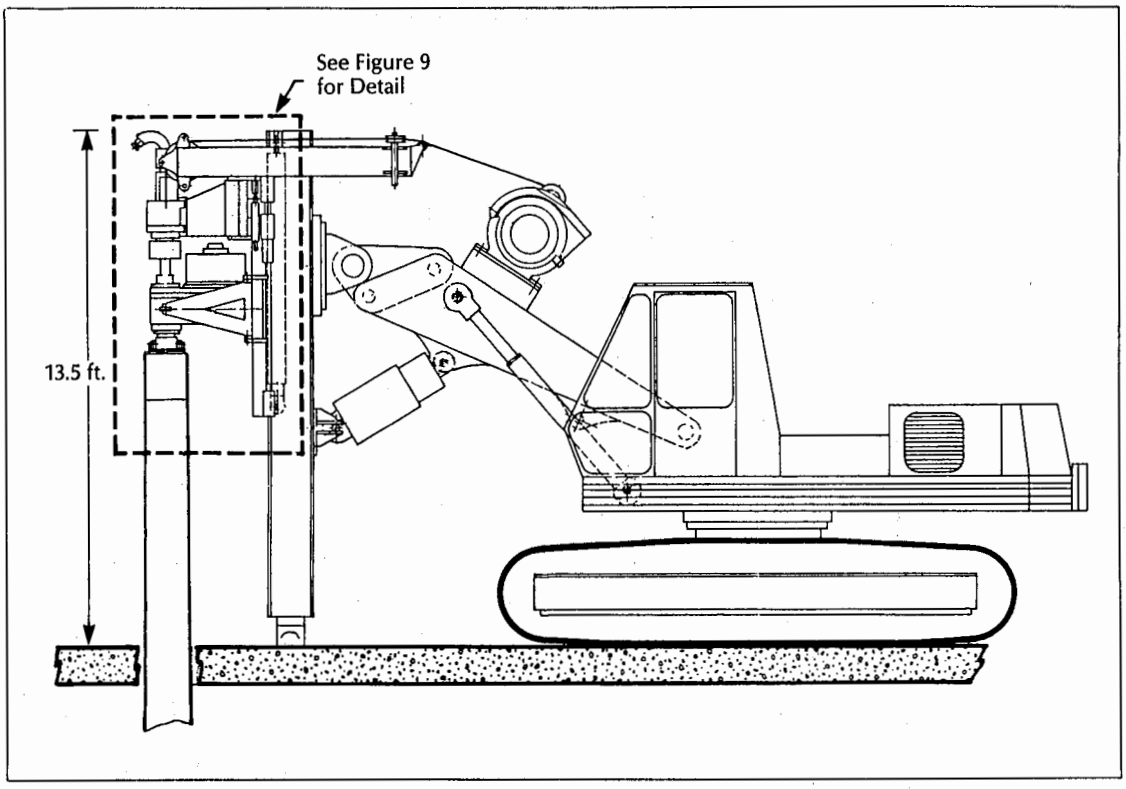

FIGURE 8. The Bauer BG-7 drill rig equipped with low headroom mast.

Piles Types and Installation Techniques. The typical sequence for the installation for both pile types consisted of three separate steps: drilling, structural steel installation and grouting.

The *cased pile installation* consisted of a permanent 9-inch outside diameter steel pipe section with a 1-inch thick wall installed in 10-foot long sections in a pre-drilled hole from cut-off level to the bottom of the rock socket. No core steel was used. A neat cement grout was used to fill the pile. In the rock socket portion of the pile, ports were cut through the steel pipe in the rock socket length so that the grout would fill the casing as well as the annular space outside. The pile was 13.5 inches in diameter through the overburden. The rock socket was drilled to a diameter of 11 inches at a minimum depth of 10 feet. The pile was designed in accordance with the minimum specified design criteria to achieve a design loading of 175 tons.

The *uncased pile installation* consisted of a 5.3-inch diameter undeformed solid steel bar installed in 10-foot long sections in a pre-drilled hole from the cut-off level to the bottom of the rock socket. The annulus between the steel core and the drill hole (13.5 inches in diameter in the overburden and 11.0 inches in diameter in the rock socket) was filled with cement grout. This pile was also designed in accordance with the minimum specified design criteria to achieve a design load of 175 tons. It was assumed in the design that no load would be carried by the concrete above the rock socket.

The equipment used to install all the piles, as shown in Figure 8, was a Bauer BG-7 track-mounted drill rig. The drilling method used was the Double Rotary Drilling method. The basic elements of this method, as shown in Figure 9, consist of:

- a lower rotary drive unit that rotates a temporary outer drill casing in one direction; and
- an upper rotary drive unit that rotates a temporary inner drill casing in the

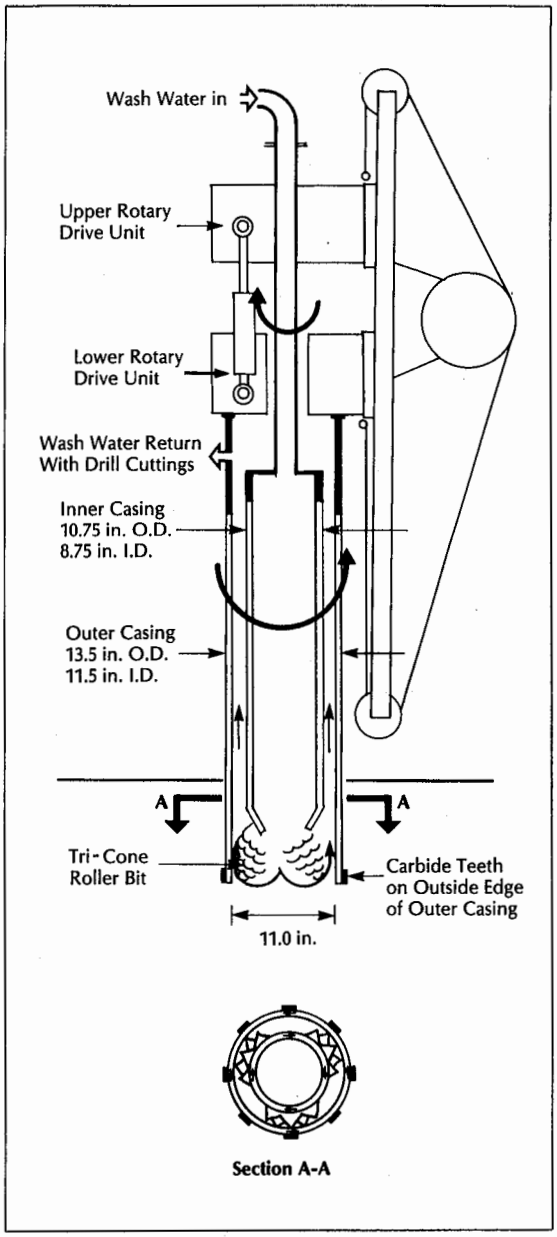

FIGURE 9. Detail of the double rotary drive heads for drilled pipe installation.

opposite direction.

The drill bit is attached to the bottom of the temporary inner casing. The rotary drive units are attached to a carriage that allows relative vertical movement between the two drive units. This relative movement is necessary to permit coupling the casing sections as well as to adjust the location of the drill bit (inner casing) with respect to the bottom of the outer casing. The carriage containing the rotary drive units is mounted on the mast of the drill rig and is used to advance and withdraw the drill string.

TABLE 2
Temporary Drill Casings and Bit Specifications

Outer casing:	
Outer diameter	13.5 in.
Inner diameter	11.5 in.
Length of individual section	4.1 ft.
Inner casing:	
Outer diameter	10.75 in.
Inner diameter	8.75 in.
Length of individual section	4.1 ft.
Drill bit:	
Diameter	11.0 in.
Type	Tri-cone roller bit

Two different length masts were used during the test program as dictated by the available headroom. A 42-foot long mast was used in unlimited headroom conditions, while a 13-foot long mast was used in low headroom conditions. There were limited areas where the headroom was as little as 10 feet, however test piles were not installed in these areas. During the installation of the production piles, the pile contractor modified the mast to install piles in these areas. Details of the temporary drill casings and the drill bit are shown in Table 2.

Because of the low headroom restrictions, the piles were designed to be installed in sections. The joints of both the inner and outer casings were designed as flush coupled joints and utilized a system of slots and wedges to transmit pullout and torque forces between the individual casing lengths.

All the drilling equipment was developed, manufactured and owned by the contractor. During drilling operations, the inner and outer casings were typically advanced simultaneously to the top of, or slightly into, sound rock (fresh to slightly weathered Cambridge Argillite — see Figure 10). The position of the drill bit was slightly below the bottom of the

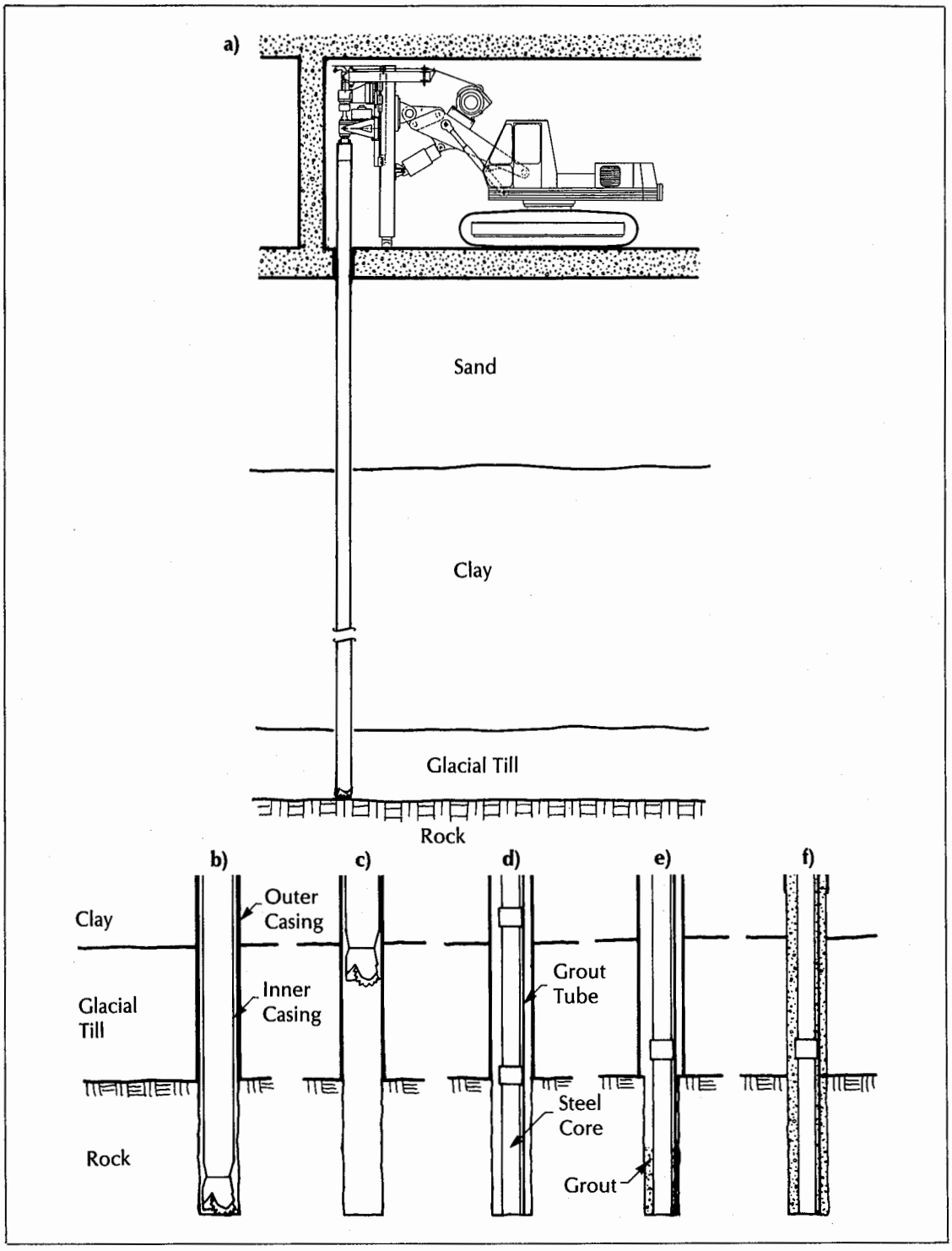

FIGURE 10. The drilled pipe installation procedure: a) drilled pipe advanced to top of rock; b) drilling rock, inner casing with roller bit; c) inner casing and roller bit extracted; d) core steel with attached grout tube lowered; e) cement grout placed by tremie; and f) outer casing extracted.

temporary outer casing as it advanced. When the top of the sound rock was encountered, advancement of the outer casing was stopped and the drill hole was advanced a minimum of 10 feet into the sound rock using the inner casing only (see Figure 10).

Cuttings were removed from the drill hole using standard water circulation techniques. Wash water was introduced to the bottom of the drill hole through the inner casing. The majority of the wash water that returned to the surface carried the cuttings through the annulus between the inner and outer casings. Determination of the strata through which the casings were advancing was made by observing the cuttings at the ground surface.

Upon completion to final depth, the drill hole was flushed with water until the return water was relatively free of suspended solids. Then the inner casing and drill bit were extracted. The temporary outer casing was left in place for later extraction.

When the drilling operations and the removal of the inner casing and drill bit were completed, the structural steel for the pile was installed. The sections used depended on the pile type. For the uncased pile, the structural steel member consisted of a solid steel core of approximately 5.3 inches in diameter. For the cased pile, a steel pipe with an outside diameter of 9 inches with 1-inch thick walls was used. For all piles the structural steel had a yield strength of 50 kips per square inch (ksi). In order to satisfy the minimum pile design requirements based on state code, a maximum steel yield strength of 36 ksi was required. However, due to the availability of steel, the contractor could only obtain steel with a yield strength of 50 ksi.

The structural steel for each pile was installed in sections approximately 10 feet long, lowered into the drill hole with the Bauer BG-7 drill rig. Steel sections for the piles were coupled together using threaded collars. The structural steel for all piles extended through the overburden soils and into the rock socket.

All piles were filled with a neat cement grout using tremie methods. Typically, the grouting procedure as shown in Figure 10 included the following steps:

1. Installation of a tremie tube (typically 1 inch O.D.) to the bottom of the drill hole during structural steel installation. The grout tubes were attached to the lowest structural steel section. The grout tubes were then attached to the inside of the steel pipe sections for the cased piles and on the outside perimeter of the core steel for the uncased pile.
2. Grout was then pumped into the drill hole through the tremie tube until uncontaminated grout was observed flowing from the top of the borehole.
3. Approximately 24 feet of temporary outer casing was then withdrawn. The tremie tube was left at the bottom of the drill hole. During withdrawal of the temporary outer casing, the grout level in the drill hole dropped varying amounts. However, the grout level was never allowed to drop below the bottom of the last piece of outer casing.
4. Steps 2 and 3 were repeated until all of the temporary outer casing was removed and uncontaminated grout was observed at the top of the drill hole.

The grout used for all piles was a neat cement grout with a water-cement ratio of approximately 0.5 and with a 20-day compressive strength of 4,000 to 5,000 pounds per square inch. The grout was typically mixed and transported to the site in ready-mix trucks. However, the grout was occasionally mixed and pumped with on-site grout pumps manufactured by the contractor.

Pile Load Tests and Results. During the test program both cased and uncased 175-ton capacity piles were successfully installed and load tested in accordance with the provisions in the contract documents.[11] In addition, the two compression piles were load tested to 500 tons to demonstrate a design capacity of 250 tons.

The test program consisted of load testing two piles in compression to a maximum load of 350 tons (twice the design load of 175 tons), load testing one pile in tension to a maximum test load of 450 tons, and load testing a rock

TABLE 3
Summary of the Results of the Load Tests

Test Pile No.	Maximum Applied Test Load (tons)	Movement at Pile Cut-off Level Total (in.)	Movement at Pile Cut-off Level Net (in.)	Estimated Maximum Rock/Grout Bond Stress Applied (psi)
1 (Compression)	500	2.338	0.494	150 to 170
1 (Tension)	450	2.370	0.687	150 to 190
2 (Compression)	500	1.622	0.395	0
3 (Tension test to failure)	375	3.780	—	180*

* Represents an ultimate bond strength value.

socket in tension to failure. In addition to these tests, the compression tests were loaded to 500 tons in order to demonstrate a higher capacity. Attempts were made to isolate the piles from the surrounding soil. To reduce the skin friction in the overburden during load testing, PVC liners were installed between the installed pile and the adjacent soil. The PVC liners were successfully installed in Test Pile No. 1. However, in Test Pile No. 2 the liners came out upon the removal of the outer drill casing.

During load testing, in addition to measuring the vertical movement at the top of the piles, an attempt was made to measure strain in the piles at depth using vibrating wire strain gages. Two strain gages were installed diametrically opposite each other on the steel sections of the piles at the approximate top of rock elevation. The results of the load tests are summarized in Table 3 and shown in Figures 11 through 14.

Based on the strain gage readings, no load reached the rock socket during load testing of Test Pile No. 2. This condition was probably due to the large amount of skin friction around the pile perimeter, since the PVC liners could not be installed in this pile.

Valuable information and experience was gained from the test pile program. Based on the results of the program, the following conclusions were drawn and recommendations made:[11]

- Drilled-in piles constructed in a manner similar to those in this test program were technically feasible for use as the foundation support system for the project.
- Drilled-in piles with design capacities on the order of 175 to 250 tons were feasible using the minimum recommended design criteria: steel casings — 35 percent of minimum specified yield strength but no greater than 12,600 psi; steel core — 50 percent of minimum specified yield strength but no greater than 18,000 psi; and, concrete or grout — 33 percent of 28-day compressive strength but no greater than 1,600 psi.
- Both the cased and uncased pile types performed adequately during their respective load tests. Therefore, the final decision regarding which pile type to use for the production piles were made by the design team based on technical submittals by the contractors and on cost comparisons.
- The maximum rock/grout bond stress applied during the pile load tests was on the order of 150 to 190 psi. The pull-out test on Test Pile 3 yielded an

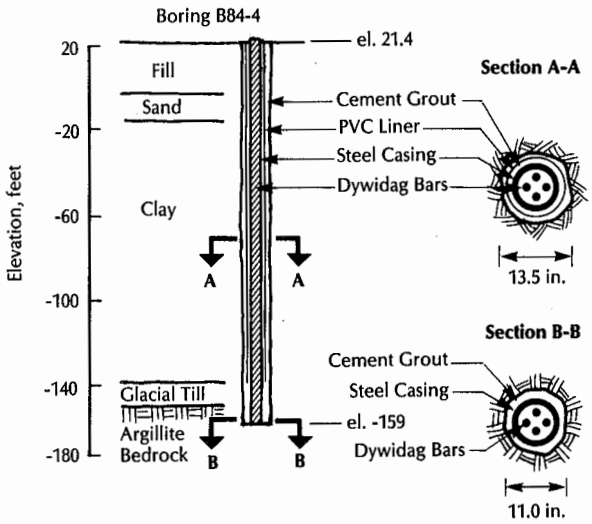

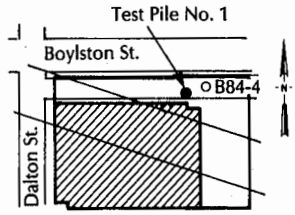

Location Plan

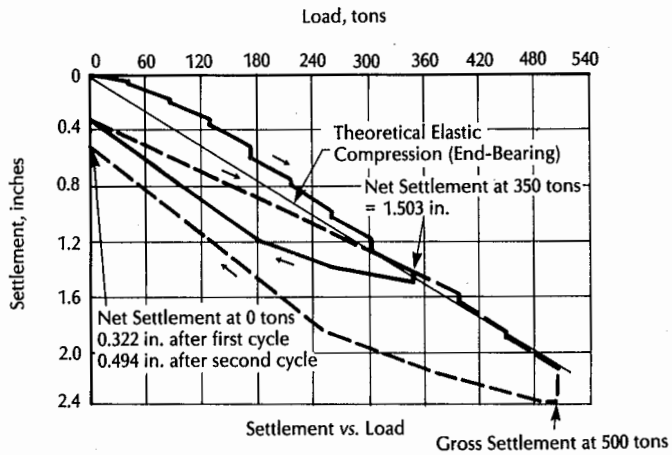

Settlement *vs.* Load

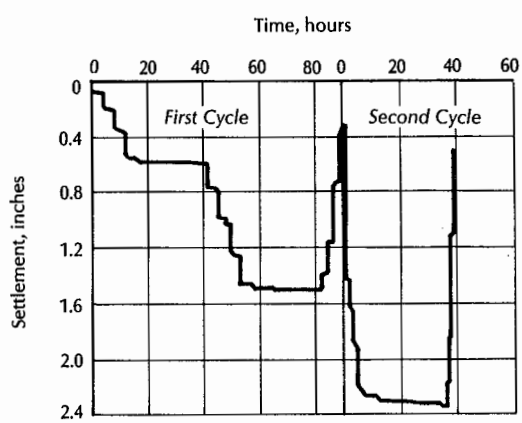

Settlement *vs.* Time

Notes

Installation

Drilling Rig: Bauer BG-7
Drilling Method: Double Rotary
Drilling Fluid: Water
Drill Bit: Tri-Cone Roller Bit (11 in. dia.)

Pile

Type: Drilled-in (Cased)
Design Load: 175 Tons
Installed Length: 182.7 ft.

Dates

Installed: November 7-11, 1984
Tested: November 26-30, 1984
(First Cycle)
December 4-6, 1984
(Second Cycle)

FIGURE 11. Results of the compression load test for Test Pile No. 1.

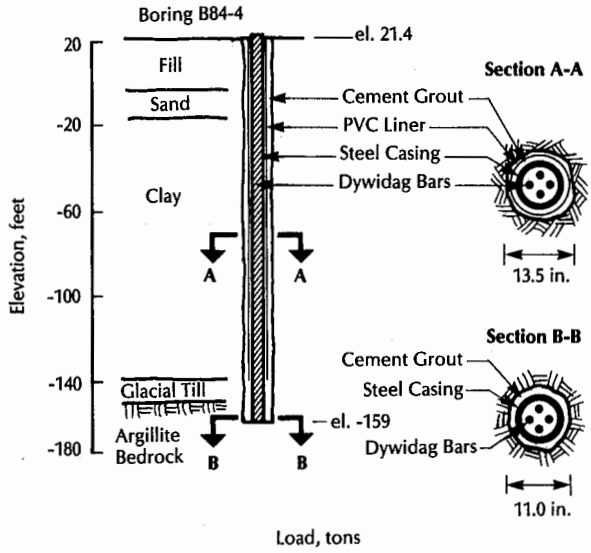

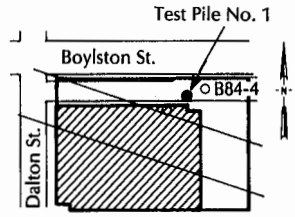

Location Plan

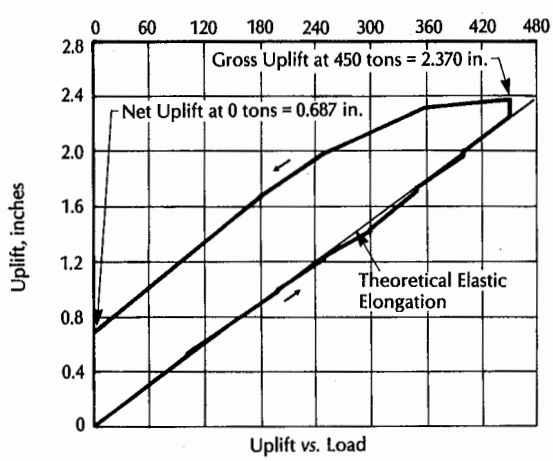

Uplift *vs.* Load

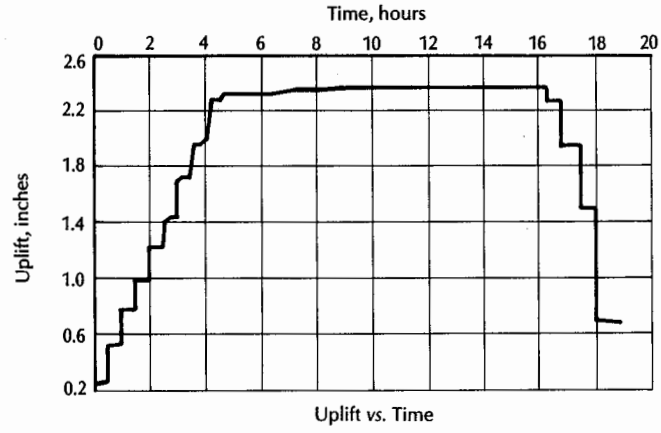

Uplift *vs.* Time

Notes

Installation

Drilling Rig: Bauer BG-7
Drilling Method: Double Rotary
Drilling Fluid: Water
Drill Bit: Tri-Cone Roller Bit (11 in. dia.)

Pile

Type: Drilled-in (Cased)
Installed Length: 182.7 ft.

Dates

Installed: November 7-11, 1984
Tested: December 11-12, 1984

FIGURE 12. Results of the tension load test for Test Pile No. 1.

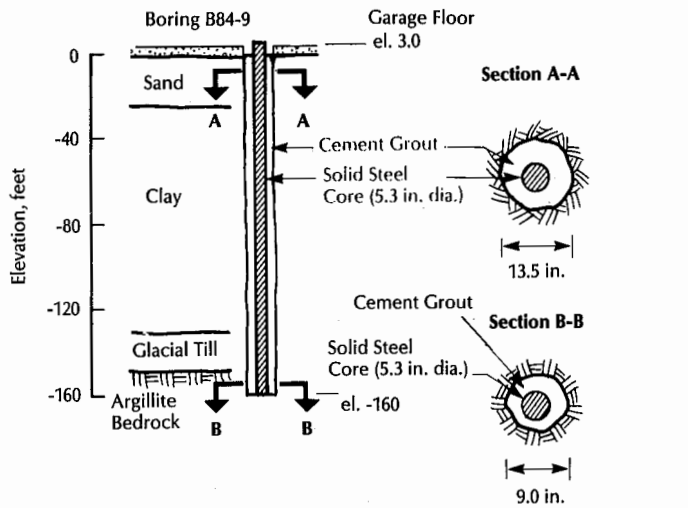

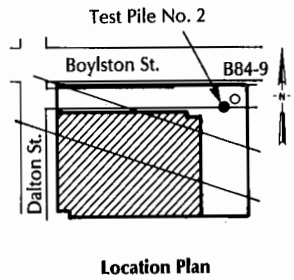

Location Plan

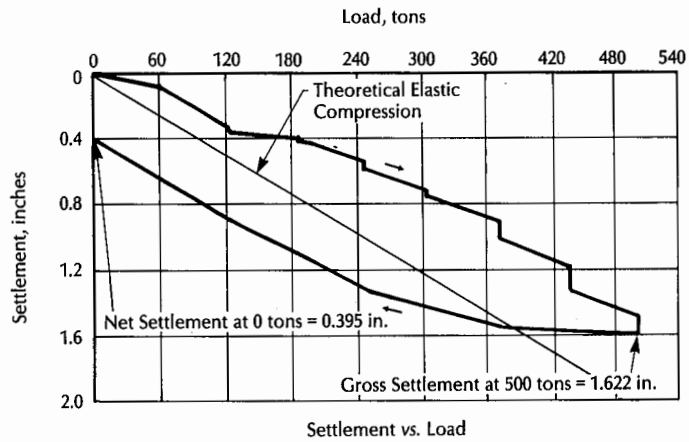

Settlement *vs.* Load

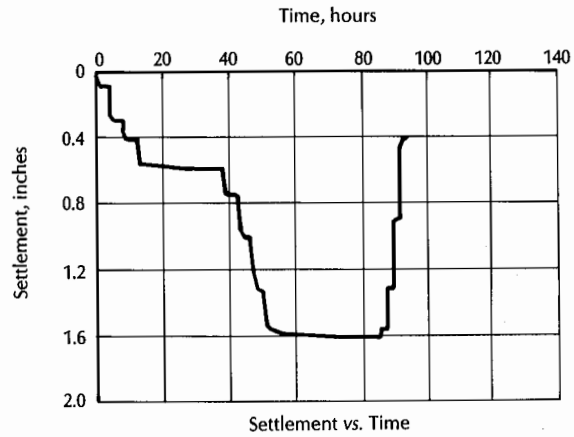

Settlement *vs.* Time

Notes

Installation

Drilling Rig: Bauer BG-7
Drilling Method: Double Rotary
Drilling Fluid: Water
Drill Bit: Tri-Cone Roller Bit (11 in. dia.)

Pile

Type: Drilled-in (Uncased)
Design Load: 175 Tons
Installed Length: 163.3 ft.

Dates

Installed: November 26-28, 1984
Tested: January 7-11, 1985

FIGURE 13. Results of the compression load test for Test Pile No. 2.

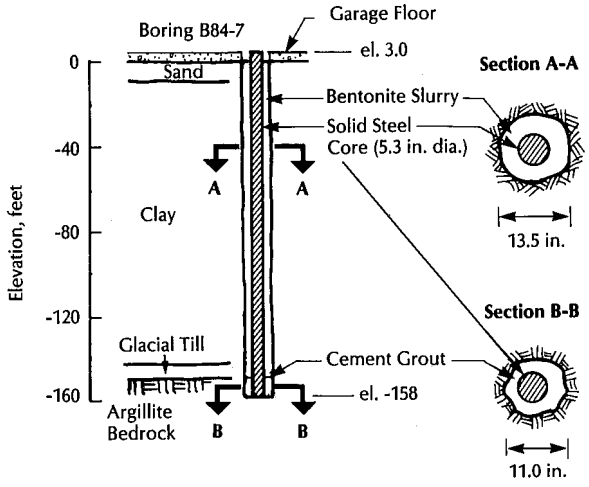

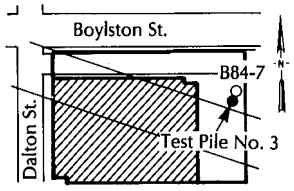

Location Plan

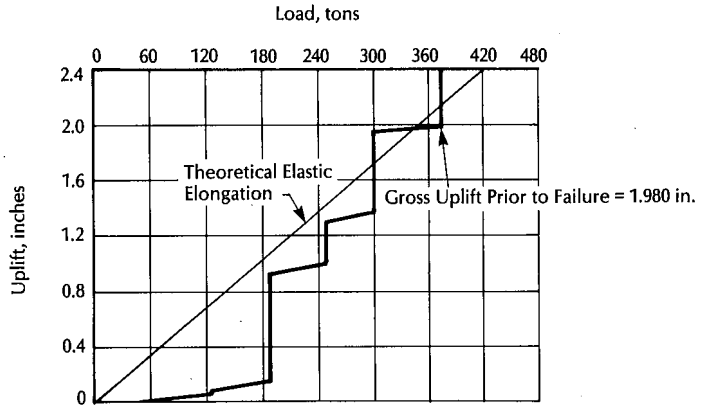

Uplift *vs.* Load

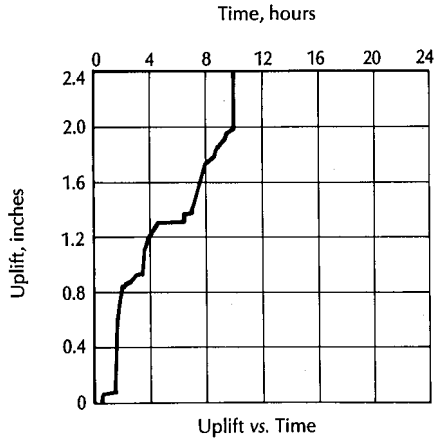

Uplift *vs.* Time

Notes

Installation

Drilling Rig: Bauer BG-7
Drilling Method: Double Rotary
Drilling Fluid: Water
Drill Bit: Tri-Cone Roller Bit (11 in. dia.)

Pile

Type: Drilled-in (Uncased)
Installed Length: 161.2 ft.

Dates

Installed: December 7-11, 1984
Tested: December 27, 1984

FIGURE 14. Results of the tension load test for Test Pile No. 3.

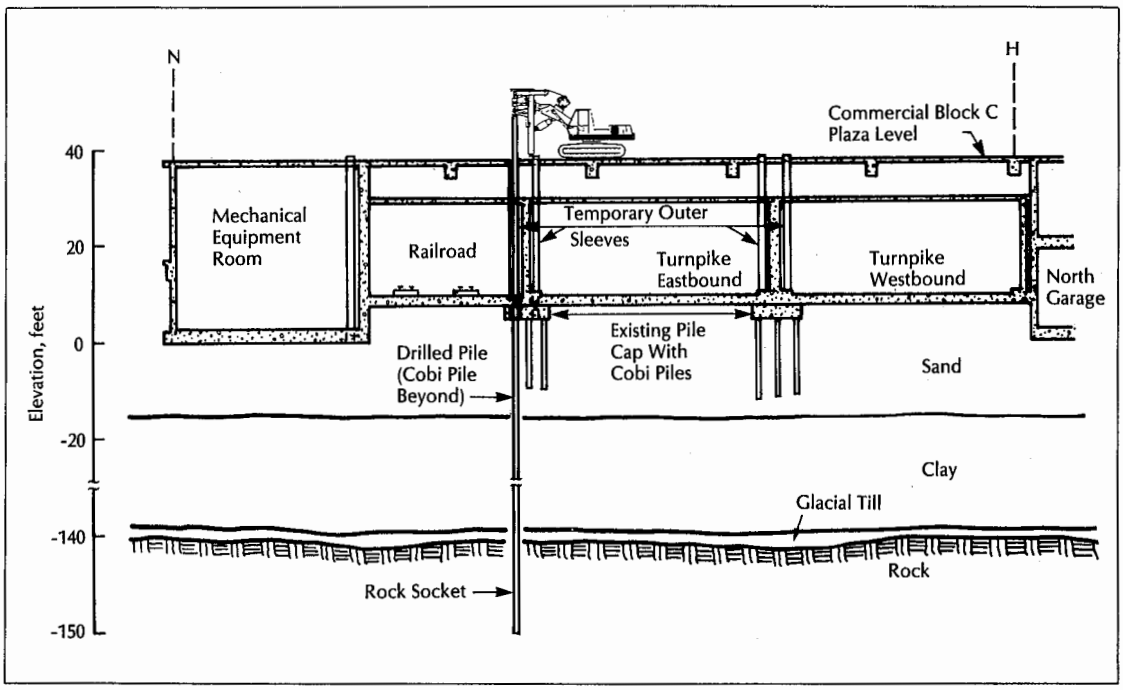

FIGURE 15. Section through the turnpike and railroad right-of-way and the mechanical equipment room showing drilled pile installation through temporary outer sleeves.

"ultimate" rock/grout bond strength of 180 psi.

The rock quality at the location of Test Pile 3, as indicated by the adjacent boring, was very poor. This design value was therefore representative of a "worst case" condition.

Therefore, it was recommended that an allowable rock/grout bond stress of 90 psi be used in the design of production piles. This recommendation was only 45 percent of the 200 psi value allowed in the state code. Furthermore, because of the uncertainty in the determination of the top of sound rock and the variable rock quality near the rock surface as demonstrated by the available borings, a minimum rock socket length of 10 feet was recommended for the design of the production piles.

Production Piles

In April 1985, a contract was awarded for foundation construction. The contract documents included the recommendations for the minimum design criteria based on the results of the load tests. The contract documents also required the installation of 333 piles in a period of 261 days. Over 50 percent of the piles were to be drilled in areas with limited headroom space. No interference to the turnpike/railroad traffic and no disruption to the Prudential Center mechanical equipment room was allowed. Since these areas were not directly accessible to the drilling rigs, the piles in these areas were installed with rigs operating from the Commercial Block C Prudential Plaza level.

No discharge of drilling spoil was allowed into these two areas (see Figures 15 through 19). In order to install piles in these areas, the specifications required that a temporary outer sleeve at least 16 inches O.D. be installed at the pile locations in the turnpike right-of-way and the mechanical equipment room from the Commercial Block C Prudential Plaza level to the mat or roadway surface below. The casing was sealed at the upper and lower levels so that all drilling spoil flowed up to the plaza level for disposal.

The pile design and installation procedures were the same as the test pile installation. Pile installation began in June 1985 with

FIGURE 16. A view of Commercial Block C (Prudential Plaza level) from which drilled piles were installed.

one rig. Three additional rigs were mobilized so that by mid-July four rigs were on-site. One pile rig with a 42-foot mast was dedicated to installing unlimited headroom piles. The remaining three rigs were equipped with short masts to install piles in areas with limited

FIGURE 17. Temporary outer sleeves sealed into the plaza level in preparation for drilling piles.

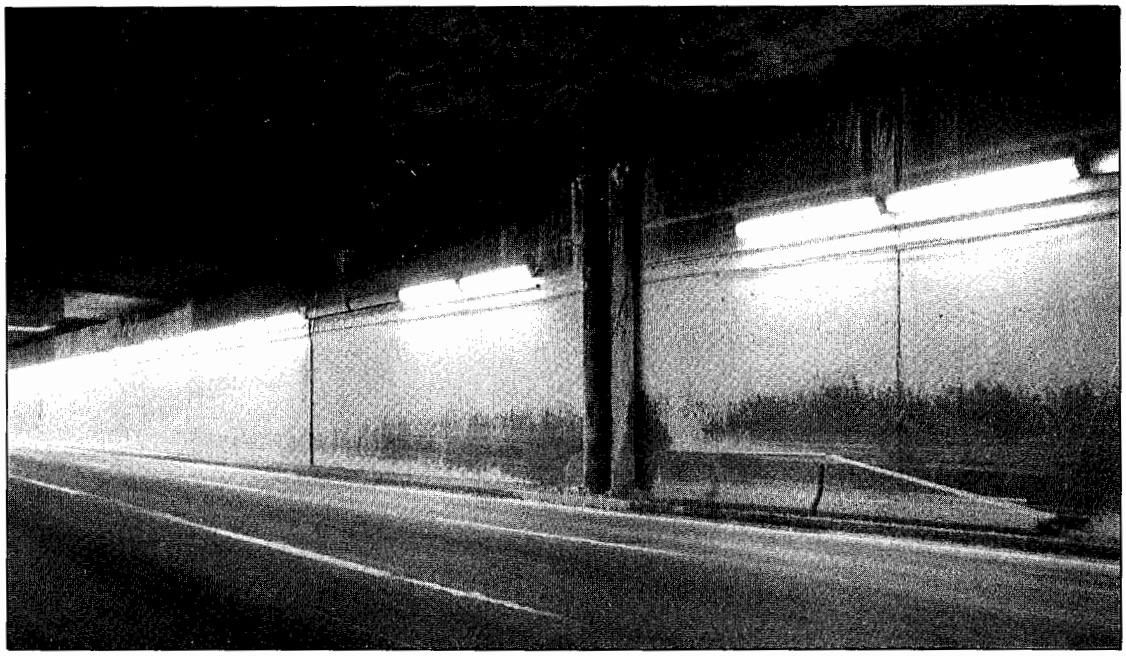

FIGURE 18. Temporary outer sleeves as seen from the turnpike right-of-way.

headroom (see Figure 20.)

In order to meet the project schedule, the pile drilling subcontractor planned to utilize three rigs that would operate 24 hours per day, five days per week for the installation of the piles. However, as the deadline drew near, the subcontractor put all four rigs into operation 24 hours per day, seven days per week. The pile installation phase was completed in mid-January 1986.

FIGURE 19. Temporary outer sleeves as seen from the mechanical equipment room.

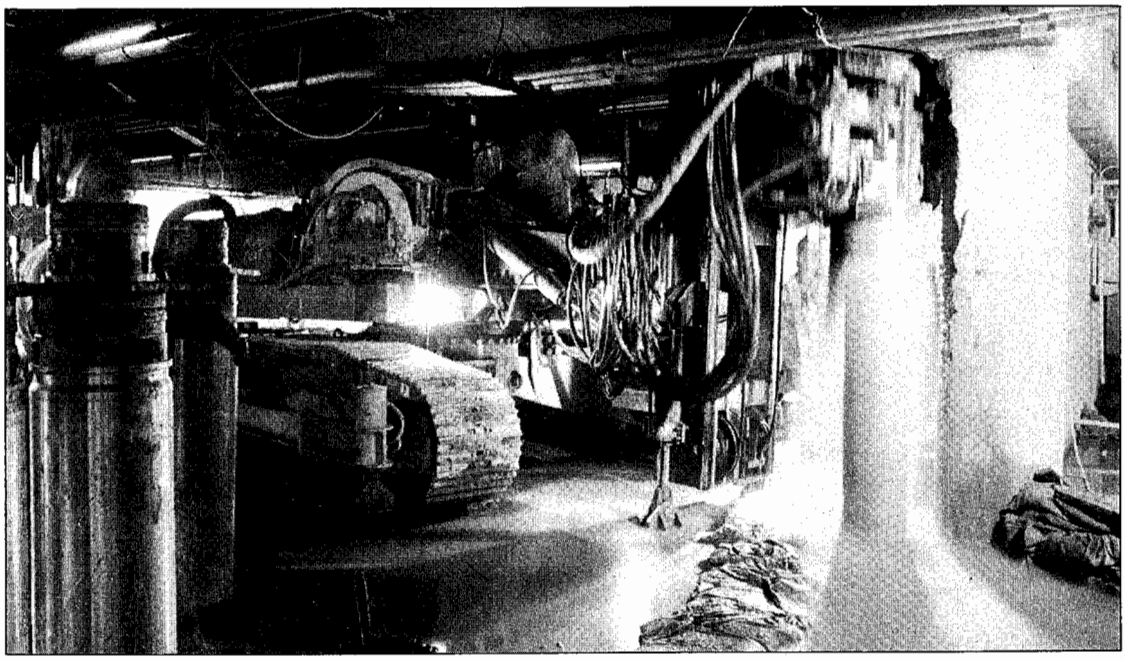

FIGURE 20. A view of the Bauer BG-7 drill rig drilling in limited headroom space with short mast.

Evaluation of the Drilled Pile Foundations

The drilled pile concept was an appropriate application for deep foundation installation, given the site and project constraints that had to be overcome. However, as with most specialty foundation installations, its use creates certain limitations that must be recognized.

Production Rates. The project constraints dictated that 50 percent of the piles had to be drilled from headroom space as low as 13 feet. The drilling and installation process, therefore, had to be accomplished in sections. The drill casings were installed and extracted in 4-foot sections in low headroom spaces and in 20-foot sections in unlimited headroom spaces. The core steel was installed in 7- to 10-foot long sections. Typical production rates for the complete installation of a pile, including grouting, was on the order of 24 hours working time. Therefore, the installation process was a time-consuming operation.

Unit Costs. Because the installation time was lengthy, the unit costs (1986) for pile installation were high. The bid prices ranged from $100 per lineal foot for 175-ton capacity piles installed from unlimited headroom space to $150 per lineal foot for 250-ton capacity piles installed from limited headroom areas.

Subsurface Investigations. Since the design load of the pile is developed in the rock socket portion of the pile, care has to be taken to assure that the pile is drilled to the proper depth into the rock. During the design stage of the project, sufficient subsurface information has to be obtained to adequately define the subsurface conditions. A more extensive test boring program is required than would be for conventional construction.

With regard to the Hynes project, particular attention was given to the thickness of the glacial till stratum and the fractured rock zone above the more sound rock. Fourteen test borings were drilled in the area of drilled pile installations. The borings were spaced typically 60 feet on-center. No borings could be drilled in the turnpike and railroad rights-of-way because of access restrictions. The subsurface data were used to develop isopachs of glacial till thickness and contours of the top of rock elevation that were used in planning the pile installation.

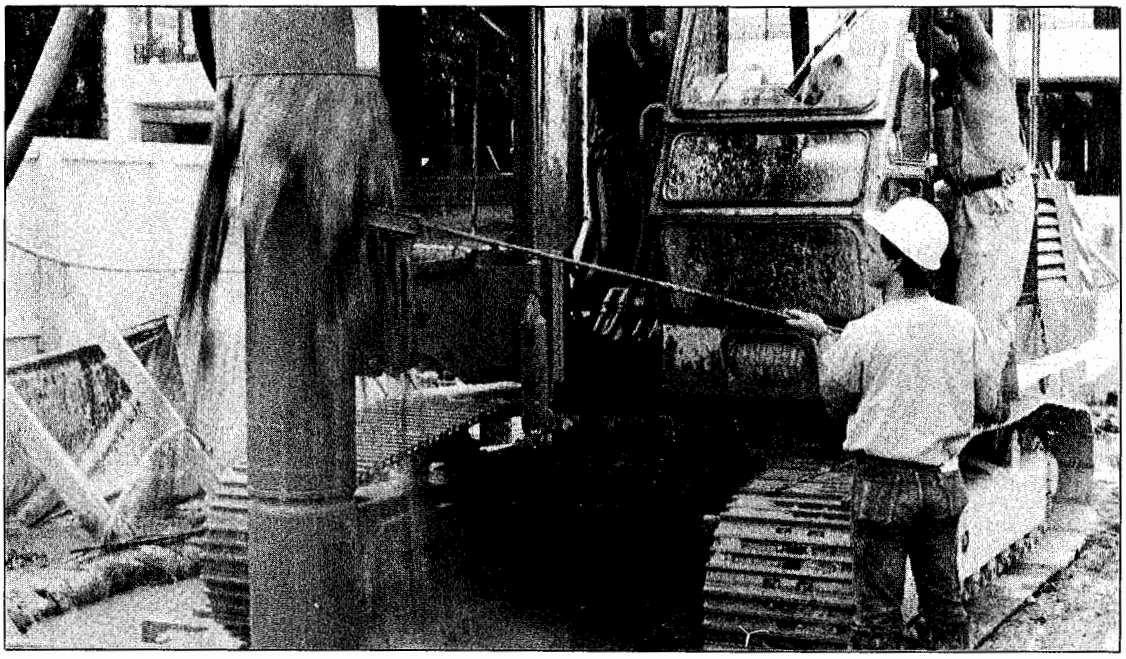

FIGURE 21. A field representative sieving the wash water to determine the top of rock strata.

Construction Monitoring of Pile Installation. Monitoring the contractor's pile installation activities is an important aspect of the installation process, not unlike the installation of driven piles. It was essential that the piles be socketed into rock to the proper distance. Visual observation of the rock socket is not possible during the pile installation without the use of sophisticated techniques such as an underwater camera (a technique that was not feasible for this project).

A full-time field representative was required for each drill rig to observe and document the installation. The methods used to verify the top of rock included:

- Comparing the depth of top of rock encountered in the pile drilling with the glacial till thickness and top of rock elevation contours as interpreted from the borings. As piles were completed, the top of rock elevation contour plan was updated to provide additional information between borings.
- Sieving the wash water returning to the ground surface. The field representative on each rig was equipped with a No. 40 sieve (see Figure 21). Even though the roller bit ground the glacial till and rock into small pieces, the stratum that was being drilled was determinable by the minerals observed in the wash water.
- Acoustical monitoring (see Figure 22). Acoustical monitoring is a method by which one is able to listen to audible noise and vibrations transmitted through various soil and rock strata during drilling. As the drilling progressed through the overburden soils and into rock, differing noises and sound patterns could be identified in each stratum. The sound patterns could be heard when picked up by sensitive microphones (hydrophones) that were located in the rock stratum. During the test boring program, a PVC casing was installed in six of the completed boreholes, which were drilled 10 to 15 feet into sound rock, in order to keep the holes open. When installing a pile, the hydrophone was lowered down to the bottom of the hole closest to the pile. The PVC casing was filled with water to enhance the sensitivity of the hydrophone to the sound waves generated by drilling the soils. While drilling the piles, the "noise" that each soil stratum generated was monitored by listening through headphones

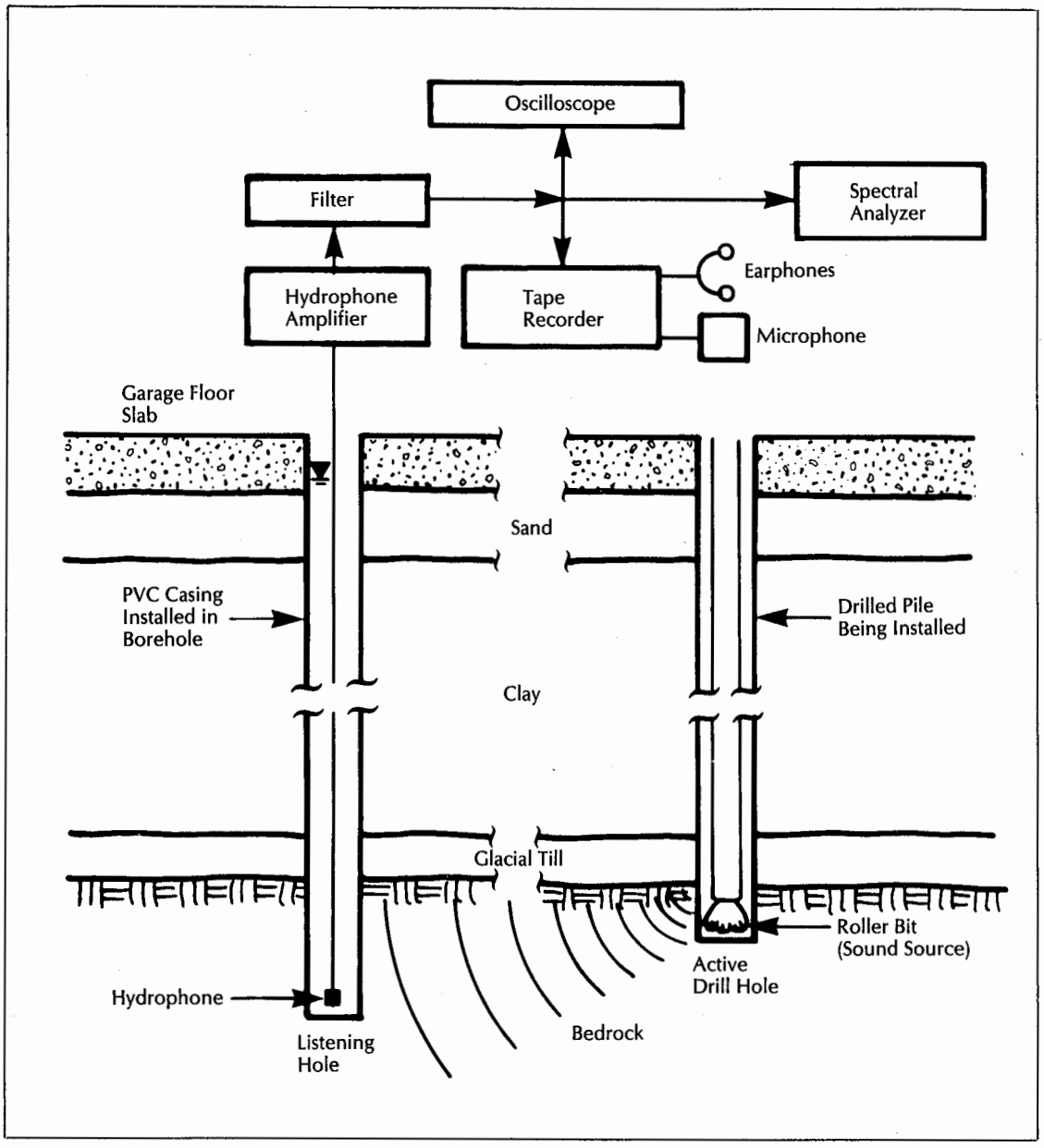

FIGURE 22. Acoustical monitoring set-up.

attached to an amplifier. Detectable differences were noted when the drill encountered sound rock.

All three verification methods should be used when determining the top of rock strata, not just one or two.

Proximity to Columns and Walls. The project requirements required that the piles be installed as close as possible to existing walls and columns, particularly in the mechanical equipment room and turnpike/railroad rights-of-way. The specialized equipment used for the project was capable of installing piles so that the distance from the face of the obstruction to the center of the pile was 12 inches.

Drilling Process. The drilling process for pile installation can be likened to drilling a large diameter test boring. In both cases, water is used to circulate the cuttings to ground

surface. A large quantity of water is used to drill each pile and large volumes of slurry are created. Containment of the slurry in the vicinity of each pile during drilling is a continual problem. Means of disposal of the slurry off of the project site to suitable locations also have to be considered. In addition, because water is used in the drilling process, freezing weather has a significant impact on the production rates.

ACKNOWLEDGEMENTS —The organizations that participated in the project are: Massachusetts Convention Center Authority, Owner; Kallmann, McKinnell & Wood Architects, Inc., Architect; Weidlinger Associates, Structural Engineer; Haley & Aldrich, Inc., Geotechnical Engineer; Perini Corporation, General Contractor; and, Spencer, White & Prentis/Bauer Corporation of America, Foundation Subcontractor. This article was originally presented at a meeting of the BSCES Geotechnical Group on January 13, 1986. The illustrations were drawn by Acey Welch, whose assistance is gratefully acknowledged.

EDMUND G. JOHNSON *is a Principal of Haley & Aldrich, Inc. He joined the firm in 1959 and has wide experience in a variety of projects, with emphasis on the geotechnical aspects of major building projects in urban areas. He was Principal-in-Charge of the Hynes project. He received his BS in Civil Engineering from Worcester Polytechnic Institute in 1951 and an MS from Princeton University in 1953. He is a member of BSCES and a Fellow of ASCE, and is a registered professional engineer in Massachusetts and New York.*

DAVID A. SCHOENWOLF *is a Senior Engineer with Haley & Aldrich, Inc. He received his BSCE and MSCE degrees from the University of Illinois in 1976 and 1978, respectively. He has 10 years of experience in solving foundation problems for major buildings in downtown urban environments. He was the project manager for the Hynes expansion and renovation project. He is a member of BSCES and ASCE, and is a registered professional engineer in Massachusetts.*

REFERENCES

1. All elevations used herein are referenced to Boston City Base (BCB) Datum, which is 5.65 feet below the National Geodetic Vertical Datum (NGVD), formerly called the U.S. Coast and Geodetic Survey Sea Level Datum of 1929. El. 0.0 BCB datum is el. -5.65 NGVD.

2. Casagrande, A., and Casagrande, L., "Foundation Investigation for Prudential Center in Boston, Vol. I," March 1958.

3. Hoyle, Doran and Berry, Boring data for the City of Boston Auditorium, September 1958.

4. C.L. Guild Construction Co. (for Metcalf & Eddy Engineers), "Prudential Center Hotel Area Boring Reports," January 7, 1960.

5. Sprague and Henwood, Inc. (for C.L. Guild Construction Co.), Municipal Auditorium boring logs, dated December 1958 through March 1959.

6. Haley & Aldrich, Inc., "Report on Subsurface Investigations and Laboratory Testing, Hynes Auditorium Expansion and Renovation, Boston, MA, Volume I, Survey and Plan Development Phase," June 1984.

7. Haley & Aldrich, Inc., "Report on Conditions of Existing Pile Foundations and Pile Load Testing, Hynes Auditorium Expansion and Renovation, Boston, MA, Volume II, Survey and Plan Development Phase," October 1984.

8. *Commonwealth of Massachusetts State Building Code, Fourth Edition,* published by The Massachusetts Secretary of State, March 31, 1984.

9. Haley & Aldrich, Inc., Communication with Mr. Leon P. Sudrabin, P.E., Consulting Engineer, Berkeley Heights, NJ, February 16, 1984.

10. Weber, R.P., "Foundation Response Caused By Disturbance of Clay," *Journal of the Geotechnical Engineering Division, ASCE,* Vol. 104, No. GT5, Proc. Paper 13765, May 1978, pp. 583-592.

11. Haley & Aldrich, Inc., "Report on Drilled-In Pile Test Program, Hynes Auditorium Expansion and Renovation, Boston, MA," February 1985.