The Role of Soil-Structure Interaction for Geotechnical & Structural Engineers

The application of soil-structure interaction has been fostered by the development of special analytical tools that will need further expansion in the future.

LYMON C. REESE

Soil-structure interaction (SSI) is the prediction of the response of soil to the loading of a structure as a function of deflection and the corresponding response of the structure. The soil may be fine-grained, coarse-grained or rock. The structure may be a mat, a footing, a caisson or a pile. The loading may be seismic, dynamic, short-term, sustained or cyclic.

As an example of SSI, the behavior of an axially loaded pile is considered. After a given time in a specified soil, under a given value of axial load, a computation can be made to show the soil resistance along the length of a given type of pile, the axial compression in the pile and, consequently, the downward movement of the pile, point by point. Figure 1 shows a model of this problem. Figure 1a shows an axially loaded pile with distribution of side resistance and end bearing. Figure 1b shows that pile replaced by a deformable member and with the soil replaced by non-linear mechanisms.

A typical set of load-transfer mechanisms is shown in Figure 1c. The soil is replaced by a set of springs and sliding blocks, multiple mechanisms for side resistance and a separate one for end bearing. Some have stated that the discrete springs (the Winkler assumption) violate the condition of continuity, but continuity can readily be satisfied by adjusting the springs if the interaction between points along the pile is known. The load-displacement functions for the soil have been developed from field tests of instrumented piles, where continuity was satisfied.

Integration of the unit values yields the load carried in skin friction, in end bearing, and the movement of the top of the pile. The

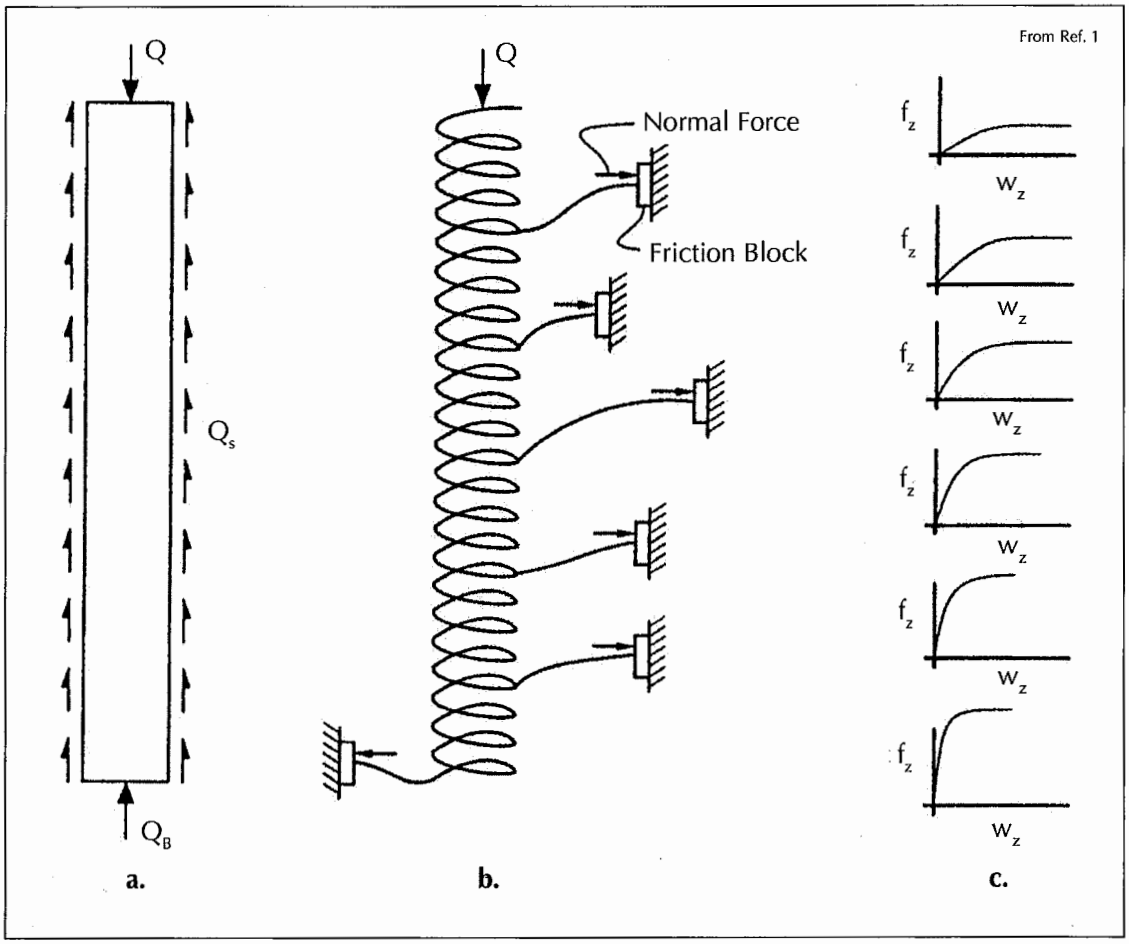

FIGURE 1. A model of a pile under axial loading.

same information can readily be computed as the compressive load is augmented. The "failure load" can be defined as the "plunging" of the pile or the load at some specified downward axial movement of the top of the pile. At any stage in the loading, the axial stress in the pile, steel or reinforced concrete can be computed, and if the pile extends above the ground, the load to cause buckling can be found. Soil-structure interaction can provide even more information than is obtained when a fully instrumented pile is tested under axial load, and current research can improve the reliability of the method.

Referring to the model in Figure 1, the differential equation can be obtained by considering an element from the pile as shown in Figure 2. The unit strain is:

$$\frac{dw_z}{dz} = \frac{Q_z}{EA} \tag{1}$$

where:

E = modulus of elasticity of the pile material;
A = cross-sectional area of the pile;
Q_z = load in the shaft at point z; and
w_z = movement of the pile at point z.

Differentiating Equation 1 with respect to Q_z, and noting that Q_z is equal to the stress distributed at the differential section f_z times the area of the section Cdz where C is equal to the circumference, the differential equation to be solved becomes:

$$EA\frac{d^2w_z}{dz^2} = f_z C \tag{2}$$

Referring to Figure 3, Equation 2, in finite-difference form, is written as Equation 3 for point m along the pile:

$$(w_z)_{m-1}-2(w_z)_m+(w_z)_{m+1} = h^2\eta_m\beta_m w_m \quad (3)$$

Load transfer f_z is expressed as some function β_m times the pile movement w_m, with C/EA equal to η_m, which will be a constant in many cases. However, the parameter β_m will usually vary with depth.

If load-transfer curves are at hand (such as those shown in Figure 1c), then Equation 3 may be solved to obtain movements at every designated point along the pile, given the applied load. If w_m is inconsistent with the value assumed in estimating β_m, a revision is made and the solution repeated. By varying the load and repeating the solution, a curve can be found to show the load versus settlement (or uplift) at the top of the pile. Other approaches can be developed for solving the differential equation, but iteration is always required because load-transfer depends on the movement of the elastic piles and movement depends on load transfer.

Whitaker and Cooke reported the results of an axial-load test of a bored pile with the geometry shown in Figure 4a.[2] The pile was installed in clay soil by the dry method of construction. The soil was an overconsolidated clay with an undrained shear strength of 76.6 kPa at the groundline (see Figure 4b), and with a value of 153.2 kPa at a depth of 15.2 meters; the water table was well below the ground surface and the unit weight of the soil was assumed to be 19.6 kN/m^3.

A computation was made for the load-settlement curve using the computer program SHAFT. The t-z curves that were employed were developed by a study of a number of load tests where details were reported as shown above.[3] A comparison of the load-settlement curves from experiment and from computation is shown in Figure 4c. The computed curve is slightly conservative but the method of analysis was successful in predicting the non-linearity that was observed in the experiment.

The concept of SSI has been discussed in the past by a number of engineers[4] and now is being extended to include all kinds of ground-supported structures under a variety of loadings at any time after construction. Thus, the scope of the technology of soil-structure interaction is very large. However, all engineers who design foundations are practicing soil-structure interaction to some degree because attention should always be given to the move-

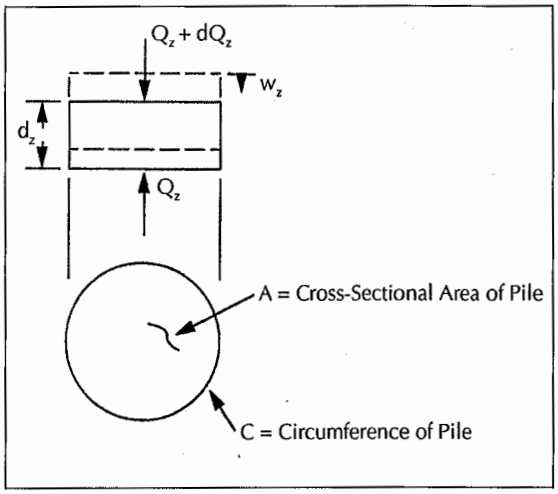

FIGURE 2. An element from an axially loaded pile.

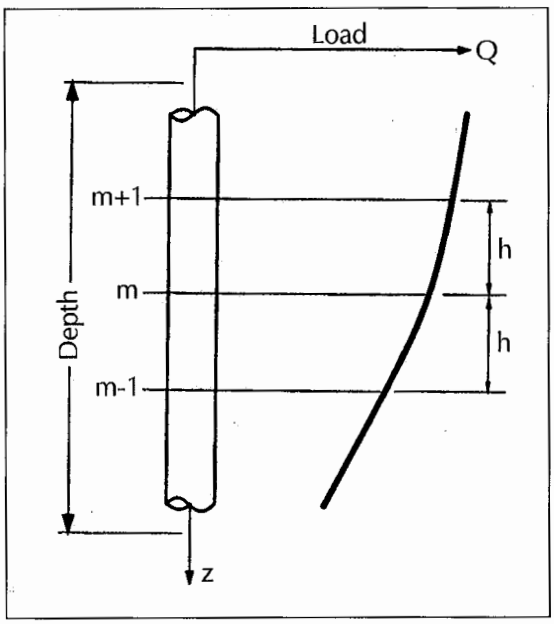

FIGURE 3. Subdivision of an axially loaded pile and a segment of a load-distrbution curve.

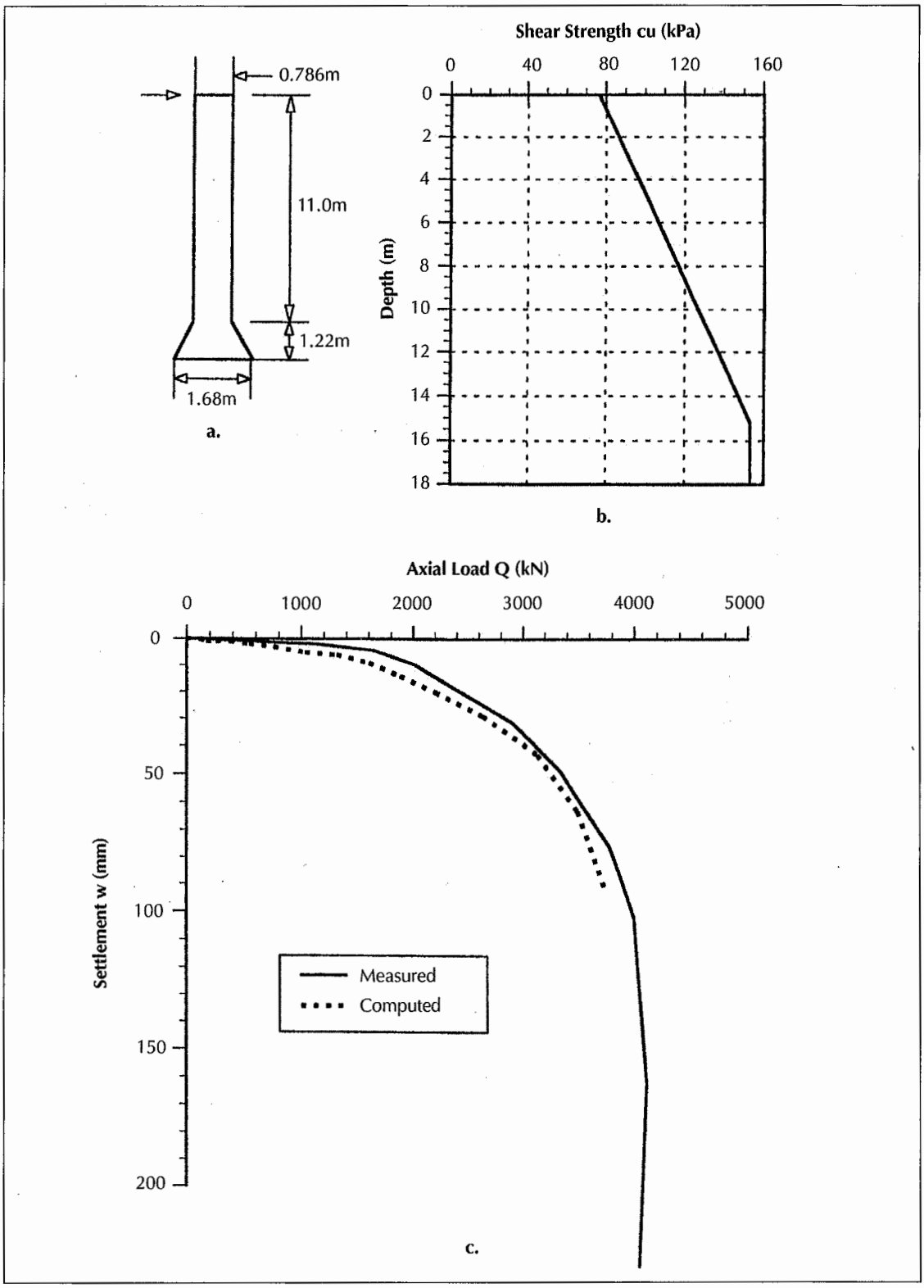

FIGURE 4. Case study of a bored pile under axial loads.

ment of a foundation due to the imposed loadings.

Building Blocks of Soil-Structure Interaction

The listing of a few names is risky because the names of many who have contributed to the technology will be omitted. However, there are a number of persons who cannot be left off any list.

A.W. Skempton. In 1951, a paper by the most significant contributor in the twentieth century to soil mechanics in Britain discussed the load-settlement behavior of a footing on clay.[5] The theory of elasticity provided the basis for Skempton's proposal, but his method was confirmed by comparing analytical results with experimental results. Early researchers in soil-structure interaction used Skempton's method for obtaining the *q-z* curves for piles and drilled shafts and for obtaining insight into the *p-y* curves for piles under lateral loading in clay.

Karl Terzaghi. In 1955, a paper by the "father of soil mechanics" in *Géotechnique* discussed subgrade modulus, gave the differential equation for a pile under lateral loading and presented a discussion of the response of soil to pile deflection.[6] Unfortunately, no experimental evidence was presented to confirm his concepts. The late Professor Raymond Dawson of the University of Texas at Austin, met Terzaghi in 1936 at the First International Conference on Soil Mechanics and Foundation Engineering. Terzaghi visited Austin on many occasions and spoke at all but one of Dawson's Texas Conferences on Soil Mechanics and Foundation Engineering. Terzaghi lectured at the University of Texas during World War II and was in Austin to speak at the eighth Texas Conference in 1956. He visited the site at Lake Austin where Hudson Matlock was performing some of the early tests of piles under lateral loading and remarked that he was not particularly happy with the paper on subgrade modulus and had been pressured to write the paper by many engineers. However, Terzaghi's writing and his evident interest in the Matlock's research were valuable contributions to the idea of soil-structure interaction.

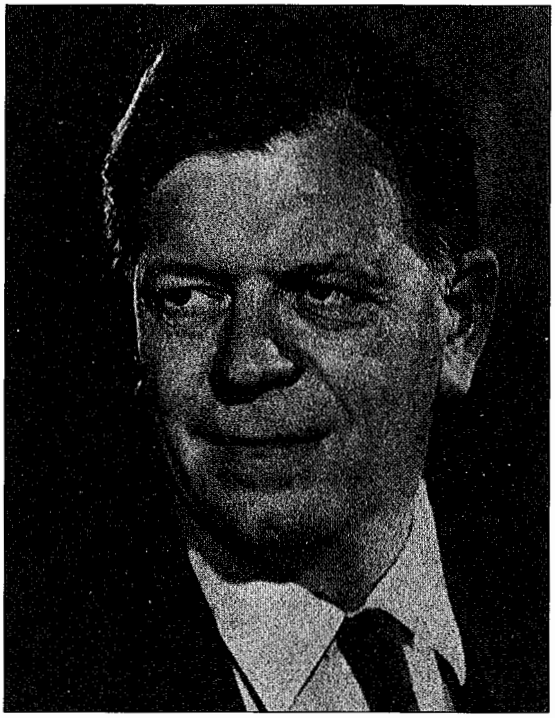

A.W. Skempton.

Arthur Casagrande. Much of soil-structure interaction depends on a detailed and intimate knowledge of the soils at the site. Perhaps no other contributor in the twentieth century did as much as Casagrande to further the knowledge of the behavior of soils under a variety of loadings. During his years of teaching at Harvard University he was responsible more than anyone else in imparting knowledge to a large number of students who then went on to make significant contributions of their own. His close association with the U.S. Army Corps of Engineers, particularly at the Waterways Experiment Station at Vicksburg, Mississippi, and with service on large numbers of consulting boards, led to significant contributions that continue to affect the knowledge and practice of soil mechanics.

John Schmertmann. Contributions of aspects of soil-structure interaction appear in many textbooks and technical articles. An excellent example of a contribution that continues to be useful and important was written by Schmertmann and his co-workers,[7,8] which allows the settlement of a footing to be computed resting on sand that had been tested by

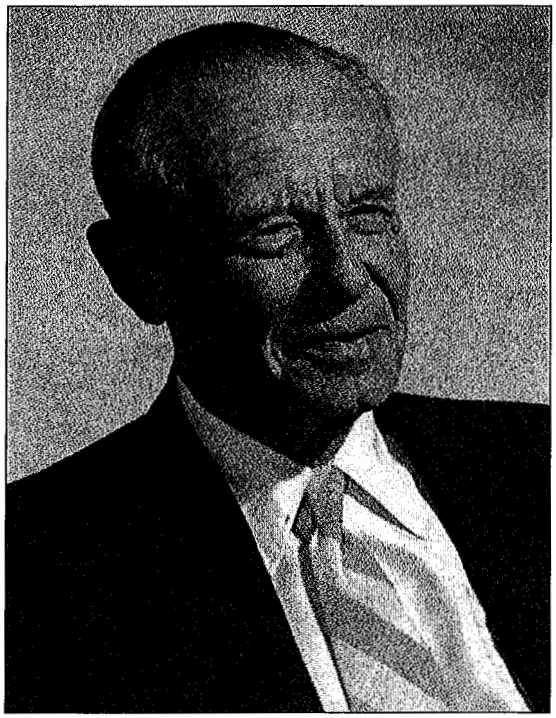

Karl Terzaghi.

Arthur Casagrande.

the Dutch cone. The device is being used extensively in parts of the United States and more so in Europe and provides an excellent pattern to the resistance against the penetration of a standard cone. Schmertmann based his method on the results of computations with the finite-element method and provided validation by obtaining excellent agreement between results from analysis and from experiment.

The Oil Industry With Offshore Structures. In the early 1950s, the oil industry ventured into deeper water in the Gulf of Mexico. Earlier platforms had been constructed in the gulf in shallow water and given the name Texas Towers. The so-called Texas Towers had been constructed off the east coast of the United States to support early-warning radar. Some information was available for lateral loading of a platform from wave forces during hurricanes, but information on piles under lateral loading was limited. One of the companies was installing a platform near the Mississippi River delta off the coast of Louisiana and asked two engineering companies to submit designs for piles under lateral loading. Widely divergent answers came in and a company meeting with the two designers revealed that basic information was lacking. Accordingly, a research program was initiated on single piles and pile groups under axial and lateral loading that lasted about two decades. The research continues today on multiple fronts by many investigators under a variety of sponsors. An elevation view of a sketch of the arrangement of piles in the field is shown in Figure 5 and a photograph of a test in progress is shown in Figure 6.

Remote-Reading Strain Gauges & High-Speed Computers. Oil industry engineers favored the testing of prototype piles in the field installed in uniform soil. Fortunately, for the research program on piles, remote-reading strain gauges were well established as research tools that could be used to provide data that defined the response in detail of piles under a variety of loadings. Also, the digital computer had become available. The first used at the University of Texas (an IBM-650) was a rotating-drum machine that used punched cards for input and output. Programming was accomplished by the Bell System and users would go to the third floor of a science build-

ing when time had been reserved for an hour's use of the computer, perhaps at 3 to 4 A.M., to attempt a solution of the non-linear differential equation by difference-equation techniques for the pile under lateral loading. The university rapidly added computing power in a special building but not without some resistance. When a famous mathematics professor was told in the faculty dining room about the new computer, he exploded: "What this campus needs is brains, not another typewriter!"

Skilled Programmers. Much of the progress in soil-structure interaction is due to the work of skilled programmers. Solutions of complex problems are done routinely with convenient input and output. The writer was sitting at a personal computer (PC) at home with input data for a pile under lateral loading. The non-linear differential equation was solved by iteration for multiple runs almost faster than the output could be called up. Page after page of output could have been printed showing deflection, bending moment, shear and soil reaction, and families of curves were available

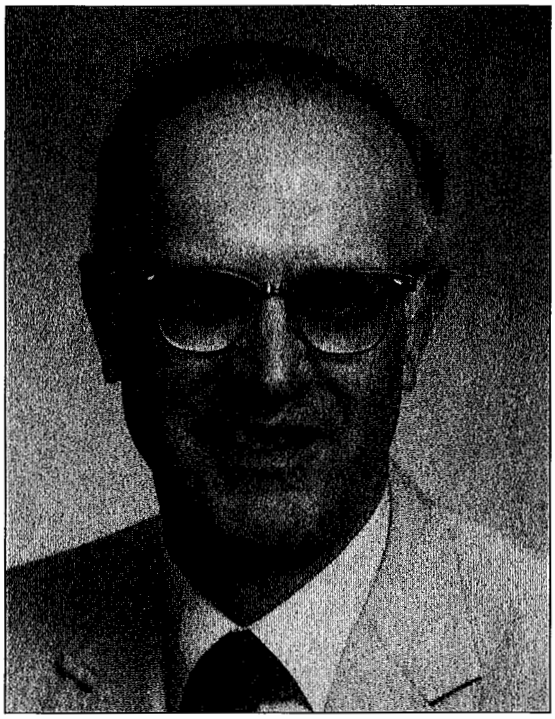

John Schmertmann.

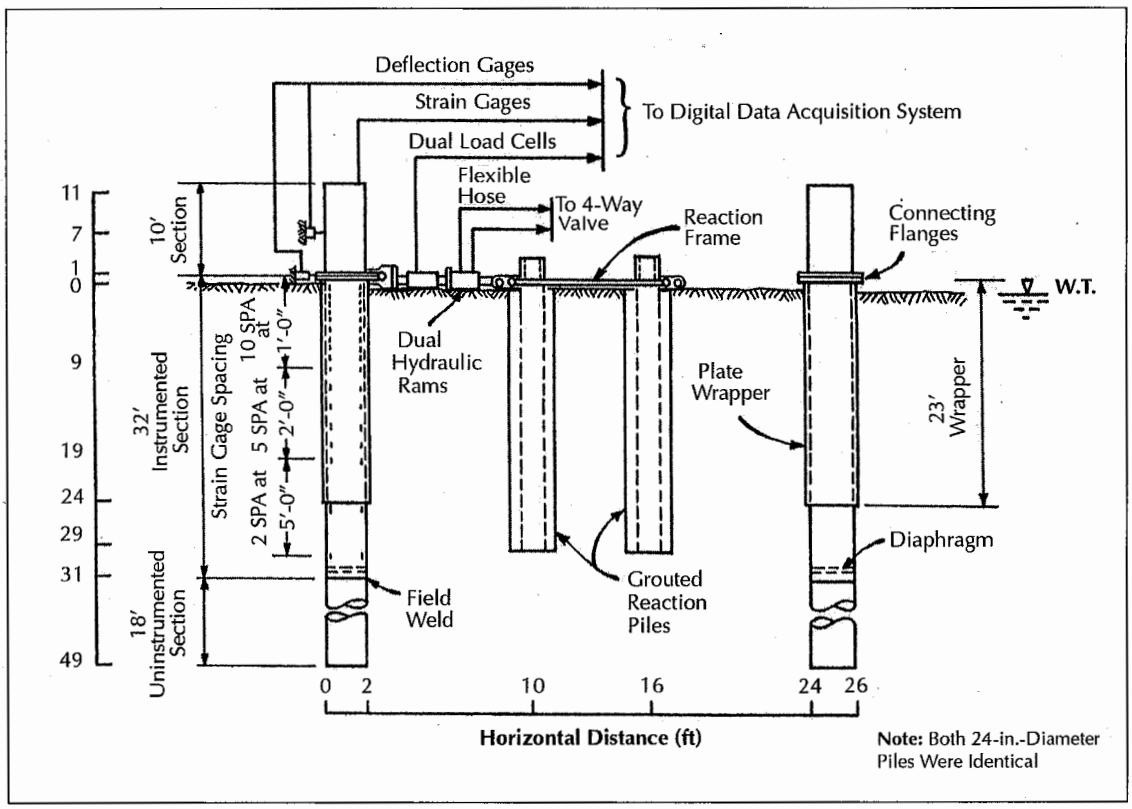

FIGURE 5. The setup for testing 24-inch-diameter pipe piles under lateral loading.

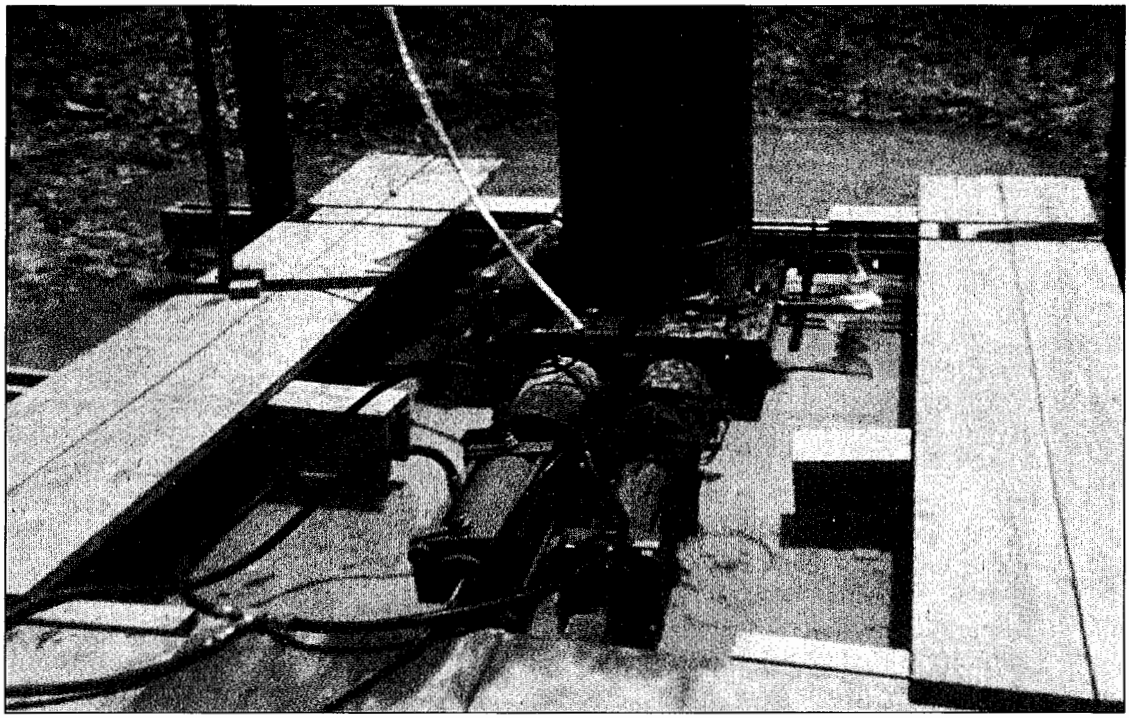

FIGURE 6. A view of hydraulic rams and load cells in a test of piles in overconsolidated clay.

showing the same information in graphical form. The exceptional speed of the solution, due to the coding and to the characteristics of the PC, enables the importance of the parameters in a solution to be evaluated with precision. An engineer at work with a PC is shown in Figure 7.

Significant Achievements

One significant achievement in SSI was determining the response of a pile to axial loading. The loadings may be static, repeated, sustained or dynamic. (Seismic loadings are in a special category and will not be addressed here, even though the concepts of SSI have been applied to designs of structures subjected to earthquakes.)

Other problems tackled include a pile subjected to lateral loading, a pile subjected to torque and the interaction of closely spaced piles in a group. These three topics are important separately but are components of the problem of the behavior of a group of piles subjected to three-dimensional loadings. The finite-element method is applied to the problem of a piled raft, and finally a presentation is made of the response of foundations subjected to dynamic loadings.

These achievements represent substantial progress in SSI but much remains to be done, not only relating to the noted topics but in extending SSI into additional topics.

Isolated Pile Under Lateral Loading. The analysis of the laterally loaded pile by the finite-difference method has been developed extensively by a number of authors since the early 1950s.[9–14] Their work proved the versatility and the theoretical applicability of the finite difference method in dealing with the highly non-linear soil-pile-soil interaction.

The *p-y* method is being used extensively in the United States and elsewhere. To illustrate its use, references are cited from Italy,[15] France,[16] Britain,[17] Australia,[18] and Norway.[19] The method is included in publications of the Federal Highway Administration[20] and the American Petroleum Institute.[21] The publications have guided the design of onshore and offshore pile foundations in the United States and elsewhere.

The laterally loaded pile is modeled as shown in Figure 8. The mechanisms are

shown to represent the soil and depict the soil as a non-linear material. The deformation of an elastic member under axial and lateral loading can be found by solving Equation 4, the standard beam-column equation:

$$\frac{d_2}{dx^2}\left(EI\frac{d^2y}{dx^2}\right)+Q\left(EI\frac{d^2y}{dx^2}\right)-p-W=0 \qquad (4)$$

where:

Q = axial load on the pile;
y = lateral deflection of the pile at point x along the length of the pile;
p = soil resistance per unit length;
EI = flexural stiffness; and
W = distributed load along the length of a portion of the pile.

A physical definition of the soil resistance p is given in Figure 9. Figure 9a shows a profile of a pile that has been installed by driving or by some other method, and shows a thin slice of soil at some depth x_i below the ground surface. The assumption is made that the pile has been installed without bending so that the initial soil stresses at the depth x_i are uniformly distributed, as shown in Figure 9b. If the pile is loaded laterally so that a pile deflection y_i occurs at the depth x_i, the soil stresses will become unbalanced as shown in Figure 9c. Integration of the soil stresses will yield the soil resistance p_i with units of F/L:

$$p_i = E_s y_i \qquad (5)$$

where:

E_s = a parameter with the units, relating pile deflection y and soil reaction p.

It is evident that the soil reaction p will reach a limiting value (and perhaps decrease) with increasing deflection. Furthermore, the soil strength in the general case will vary with depth. Therefore, only in rare cases will E_s, sometimes called the soil modulus, be constant with depth.

The bending stiffness EI of a metal pile will probably be constant for the range of loading of principal interest. However, the EI of a reinforced concrete pile will change with the bending moment. In many designs, it is desirable to reduce the bending stiffness by reducing the wall thickness of a steel-pipe pile or by reducing the number of bars in a reinforced-concrete pile. Thus, in the general case the bending stiffness will not be constant with x nor with y.

In view of the non-linearities of Equation 4, numerical methods must be utilized to obtain a solution. The difference-equation method can be employed with good results. Equation 6 is the differential equation in difference form, where the pile is subdivided as shown in Figure 10 (on page 16):

$$y_{m-2}R_{m-1}+y_{m-1}(-2R_{m-1}-2R_m+Qh^2)+y_m(R_{m-1}+4R_m+R_{m+1}-2Qh^2+k_mh^4)+y_{m+1}(-2R_m-2R_{m+1}+Qh^2)+y_m+2R_{m+1}-W_mh^4=0 \qquad (6)$$

where:

$R_m = E_mI_m$
$k_m = Esm$

The pile is subdivided into n increments and $n+1$ equations can be written of the form of Equation 6, yielding $n+5$ unknown deflec-

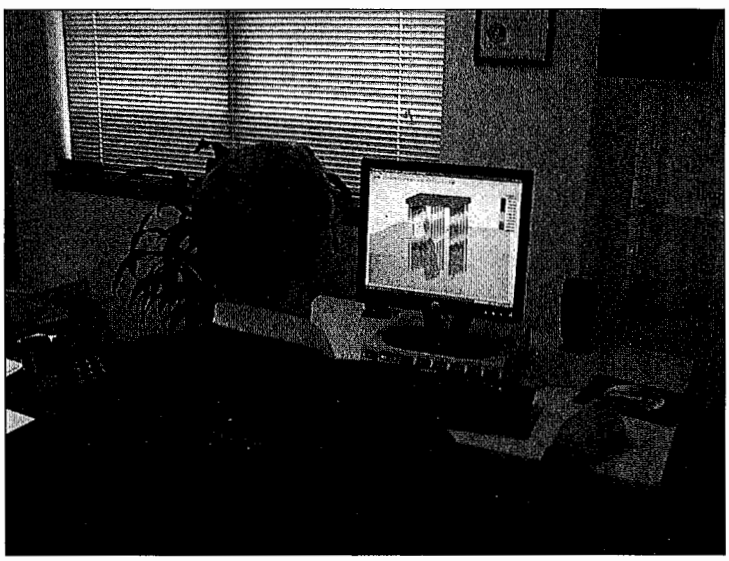

FIGURE 7. Typical activity of an engineer at a personal computer.

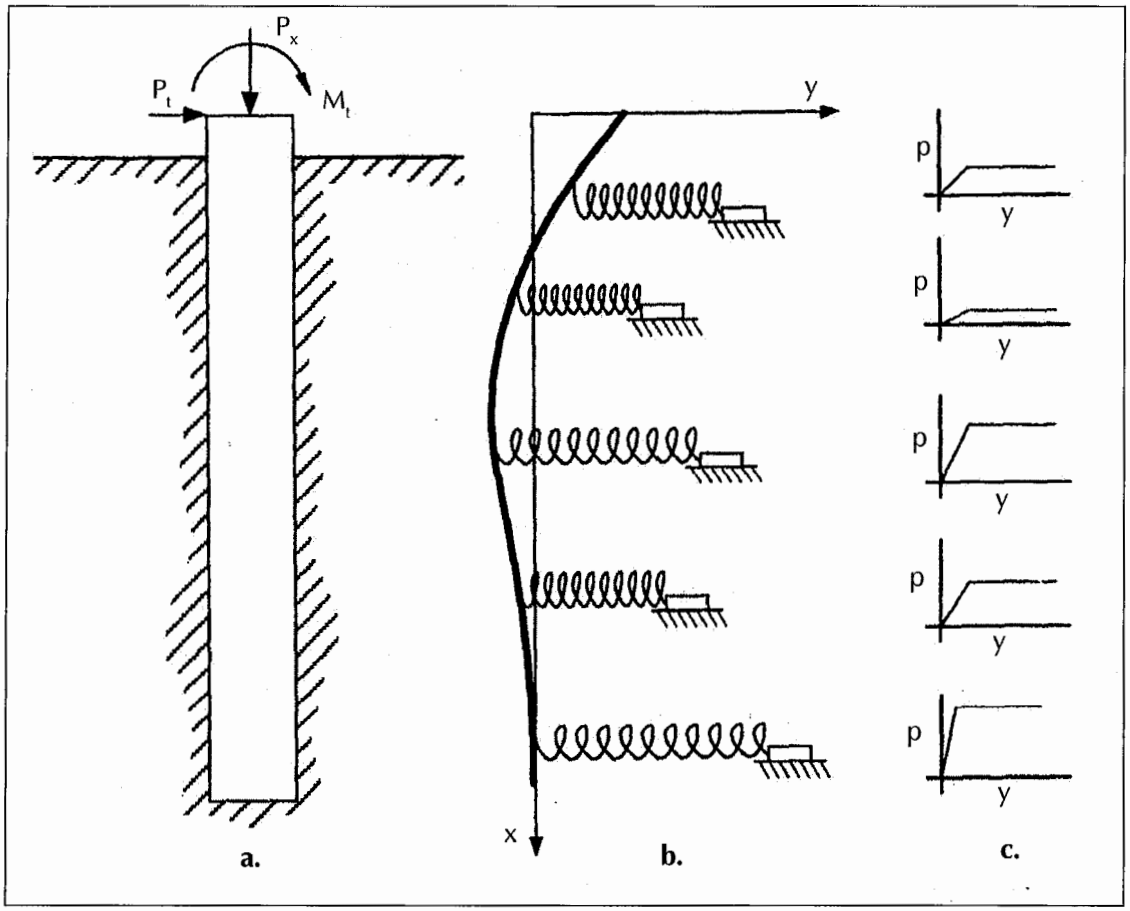

FIGURE 8. A model of a laterally loaded pile.

tions. Two boundary conditions at the bottom of the pile and two at the top of the pile allow for a solution of the $n+5$ equations with selected values of R and k. The value of n and the number of significant figures in y are selected to yield results with appropriate accuracy. The solution of the equations proceeds readily by Gaussian elimination. The value of n ranges from perhaps 50 to 200; on most computers double-precision arithmetic is necessary with about fifteen significant figures.

The solution proceeds as illustrated in Figure 11. Figure 11a shows a pile subjected to a lateral load. Figure 11b shows a family of p-y curves where the curves are in the second and fourth quadrants because soil resistance is opposite in direction to pile deflection. Also in Figure 11b is a dashed line showing the deflection of the pile, either assumed or computed on the basis of an estimated soil response. Figure 11c shows the upper p-y curve enlarged with the pile deflection at that depth represented by the vertical, dashed line. A line is drawn to the soil resistance p corresponding to the deflection y with the slope of the line indicated by the symbol E_s. Figure 11d shows the values of E_s plotted as a function of x. In performing a computation, the computer utilizes the computed values of E_s and iterates until the differences in the deflections for the last two computations are less than a specified tolerance. If desired, bending moment along the pile can be computed during iterations, using the appropriate difference equation, and the value of EI can be computed and varied along the pile with each iteration.

After deflections have been computed, difference equations can be employed to compute rotation, bending moment, shear and soil reaction as a function of x. The number of iter-

ations for a tolerance of 0.00025 millimeters is usually less than 20. A high-speed computer can converge to a solution in less than one second of central-processor time. Thus, if *p-y* curves are available, a solution to a given problem can be obtained with little difficulty.

Soil-response curves have been obtained from several full-scale experiments. The piles were instrumented for the measurement of bending moment as a function of depth. Loads were applied in increments and a bending-moment curve was obtained for each load. Two integrations of each curve yielded pile deflection and two differentiations yielded soil reaction.[22] The cross-plotting of deflection and soil resistance yielded experimental *p-y* curves.

Methods for predicting *p-y* curves have been worked out for soft clay,[12] for stiff clay below the water surface,[13] for stiff clay above the water table[23,24] and for rock.[25] Several authors have made use of reports in the technical literature on instrumented tests and on uninstrumented tests to make other recommendations.[26–30]

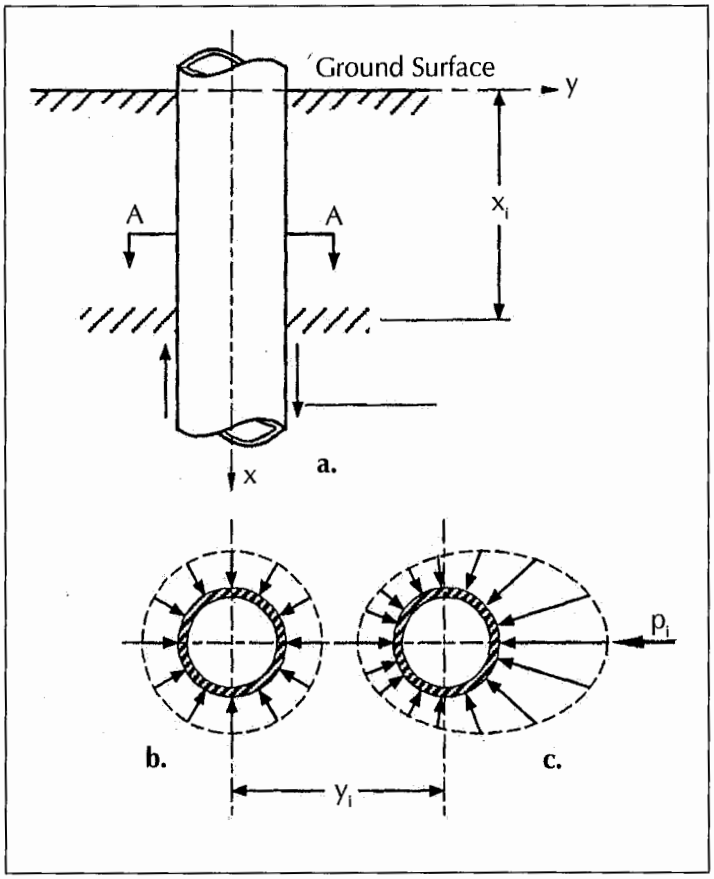

FIGURE 9. Definition of *p* and *y* as related to the response of a pile to lateral loading.

Price and Wardle reported the results of lateral-load tests of a bored pile (identified as TP12) with a length of 12.5 meters and a diameter of 1.5 meters.[31] The location of the tests was not given and is listed as the location of the British Building Research Establishment for convenience. The reinforcement consisted of 36 round bars, 50 millieters in diameter, on a 1.3-meter-diameter circle. The yield strength of the steel was 425 N/mm^2. The cube strength of the concrete was 49.75 N/mm^2. The bending moment at which a plastic hinge would occur was computed to be 15,900 kN-m at concrete strain of 0.003.

The authors installed highly precise instruments along the length of the pile. The readings allowed the determination of bending moment with considerable accuracy. The properties of soil reported by the authors, and the interpretations used for the following analyses, are shown in Table 1.

The lateral load was applied at 0.9 meters above the ground line. Each load was held until the rate of movement was less than 0.05 millimeters in 30 minutes. The load was reduced to zero in stages and held at zero for one hour. The computer program LPILE was used in computing the response of the pile with the conditions indicated.

The comparisons of pile-head deflection and maximum bending moment are shown in Figure 12 (on page 18). The curves for deflection show that the computation is about 20 percent unconservative for the larger loads and in good agreement for the smaller loads. The maximum bending moment from the experiment is about 12 percent higher than the

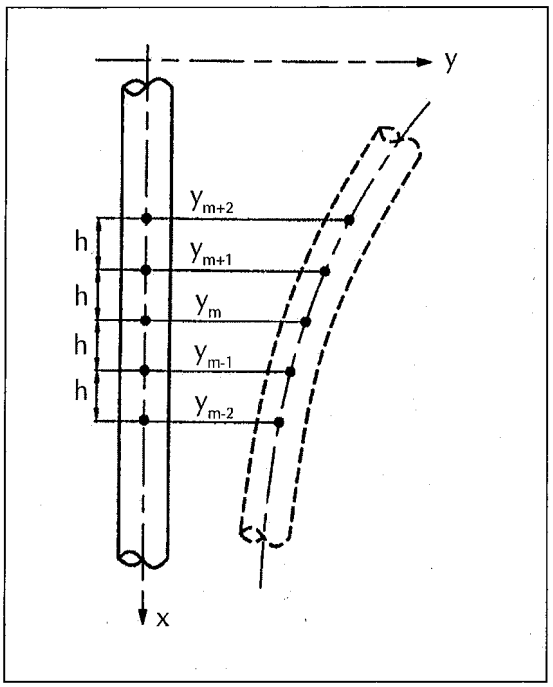

FIGURE 10. A representation of a deflected pile.

computed value at the same lateral load. The computer yielded a lateral load of 4,520 kN to cause a plastic hinge.

Isolated Pile Subjected to Torque. Most piles are installed in groups. The non-linear models for isolated piles under axial loading and lateral loading were presented earlier because they are employed in the analysis of groups. For a similar reason, the analysis of an isolated pile subjected to torque is presented here.[32] While the models for single piles under axial and lateral loading have numerous independent applications, the model for torque has little utility except in the analysis of a group that rotates about a vertical axis.

The increment in Figure 13 represents a free-body element taken from a cylindrical pile subjected to torque. The soil around the element is assumed to exhibit a resistance to rotation as a function of the angle of twist. The torque at the top of the increment is T and $T+dT$ at the bottom. The change in torque dT along the length Δx is due to transfer of torque to the soil, as shown in Equation 7:

$$dt = ((k_\theta)(\theta_x))((2\pi r)(\Delta x))(R) = (2\pi R^2)(k_\theta)(\Delta x) \quad (7)$$

where:

k_θ = stiffness of soil; and
θ = angle of rotation.

The angle of twist over the increment is computed from the standard equation from mechanics:

$$\theta_x = (T_x \Delta x)/GJ \quad (8)$$

where:

G = modulus of elasticity in shear; and
J = polar moment of inertia.

Equations 7 and 8 may be solved in a number of ways. An expeditious way is to select values for the angle of twist at the bottom of the pile. The two equations can then be solved for the corresponding torques. Even if the stiffness of the soil is non-linear with the angle of twist, iteration will not usually be necessary if the length of the increments is chosen to be relatively small.

Stoll pointed out that the torsion-load test on piles is simpler and more economical to perform than the axial load test.[33] The back-analysis of the torsion response of test piles yields values of shear modulus for the soil that are in good agreement with those deduced from t-z curves from axial load tests. Seed and Reese reached a similar conclusion in their research that used the torsion vane to derive the load-transfer curve for side resistance under axial loading.[34]

Interaction of Closely Spaced Piles in a Group. Stresses are transferred through the soil around a loaded pile but the stresses diminish rapidly with distance. If piles are close together, the transfer of stress from one pile to the next must be considered, and the *efficiency* of the piles in the group could be reduced. At the outset, mention of the cost of performing a field test of a pile group is appropriate, especially if the piles are instrumented. The cost is significantly reduced if tests are performed on small-sized piles in the laboratory. However, the inability to model the stress from the overburden seriously limits the value of tests of piles under axial loading; the limitation is less severe for tests of small-sized piles under lateral load but the limitation remains. The cen-

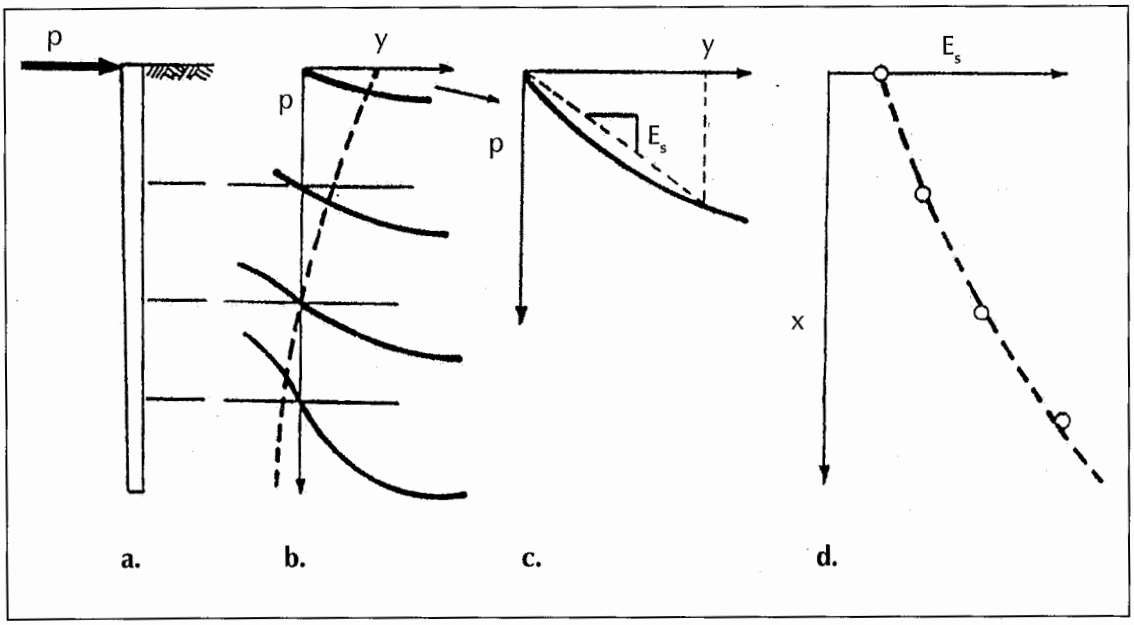

FIGURE 11. The procedure for solving the response of a laterally loaded pile.

trifuge may be used to test piles that are properly modeled but such tests are expensive because of the nature of the test and because of the large number of parameters that must be addressed. The result is a significant lack of data on the behavior of closely spaced piles.

O'Neill made a comprehensive study of data that were available on the interaction of closely spaced piles.[35] With regard to the behavior of piles under axial loading, he wrote the following:

> In view of the preceding observations concerning the effects of time, soil characteristics (consistency, initial density, stress history, permeability) on efficiency, along with the effects of cap contact, driving order, and pile-capacity variation, it is not reasonable to apply general efficiency formulas to design.[35]

With regard to piles under lateral loading, the failure to model the overburden stress is less of a problem because the pile obtains much of the resistance from near-surface soils. Further, the magnitude of the loading is much less than for axial loading and a number of pile groups have been tested in the field.

TABLE 1.
Reported Properties of Soil at Garston

Depth (m)	Description	N_{SPT}	Unit Weight (kN/m³)	Friction Angle (°)
0–0.36	Fill	18	—	—
0.36–3.5	Dense Sandy Gravel	~65	21.5	43
3.5–6.5	Coarse Sand & Gravel	30	9.7	37
6.5–9.5	Weakly Cemented Stone	~61	11.7	43
9.5–	Highly Weathered Sandstone	~140	—	—

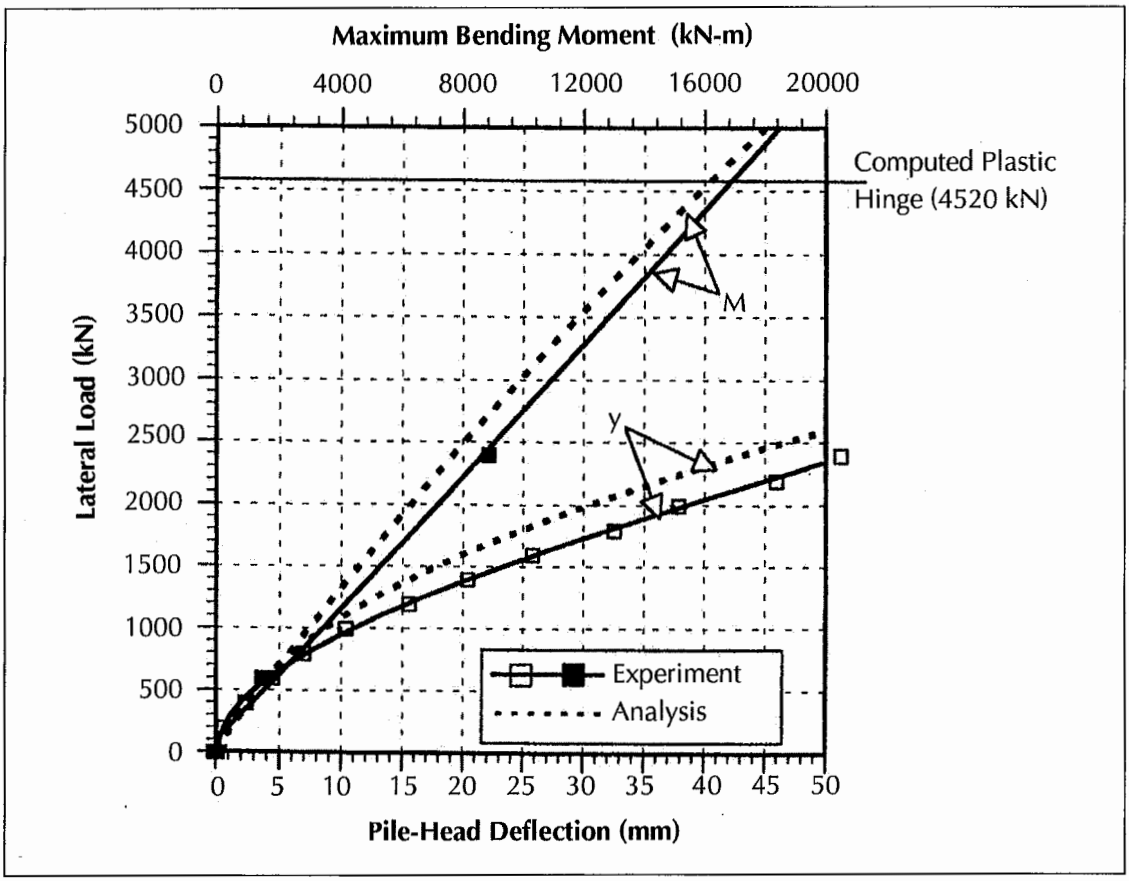

FIGURE 12. A comparison of the experimental and computed values of maximum bending moment and pile head deflection (static loading, Garston).

For axial load, with no contact between the cap and the soil, the theoretical capacity for a group can be computed by assuming that the soil inside the group moves downward with the piles. The failure of the block, including piles and enclosed soil, can be computed where the capacity in side resistance occurs along an area around the group and the capacity in end bearing occurs in the horizontal area at the base of the piles (including the areas of the points of the piles and the enclosed soil). O'Neill's work for piles under axial load showed that the *block model* failed to agree with some experiments; however, the model has the advantage of theoretical correctness.[35]

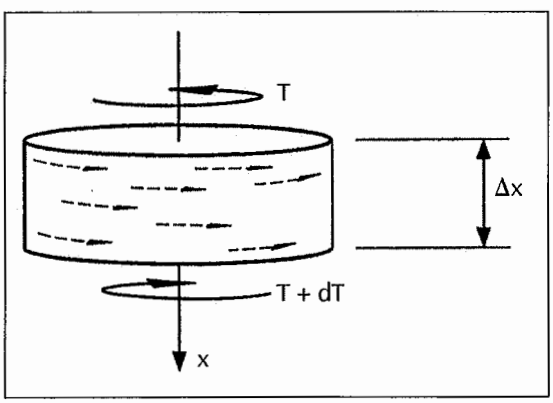

FIGURE 13. An element of a pile subjected to torque.

With regard to piles in a group under lateral load, the results of a number of experiments provide data that can be analyzed to lead to recommendations. Scott studied the results of experiments with closely spaced piles where an isolated pile was loaded in addition to the group.[36] Experiments in the field and the laboratory were included. The results of that

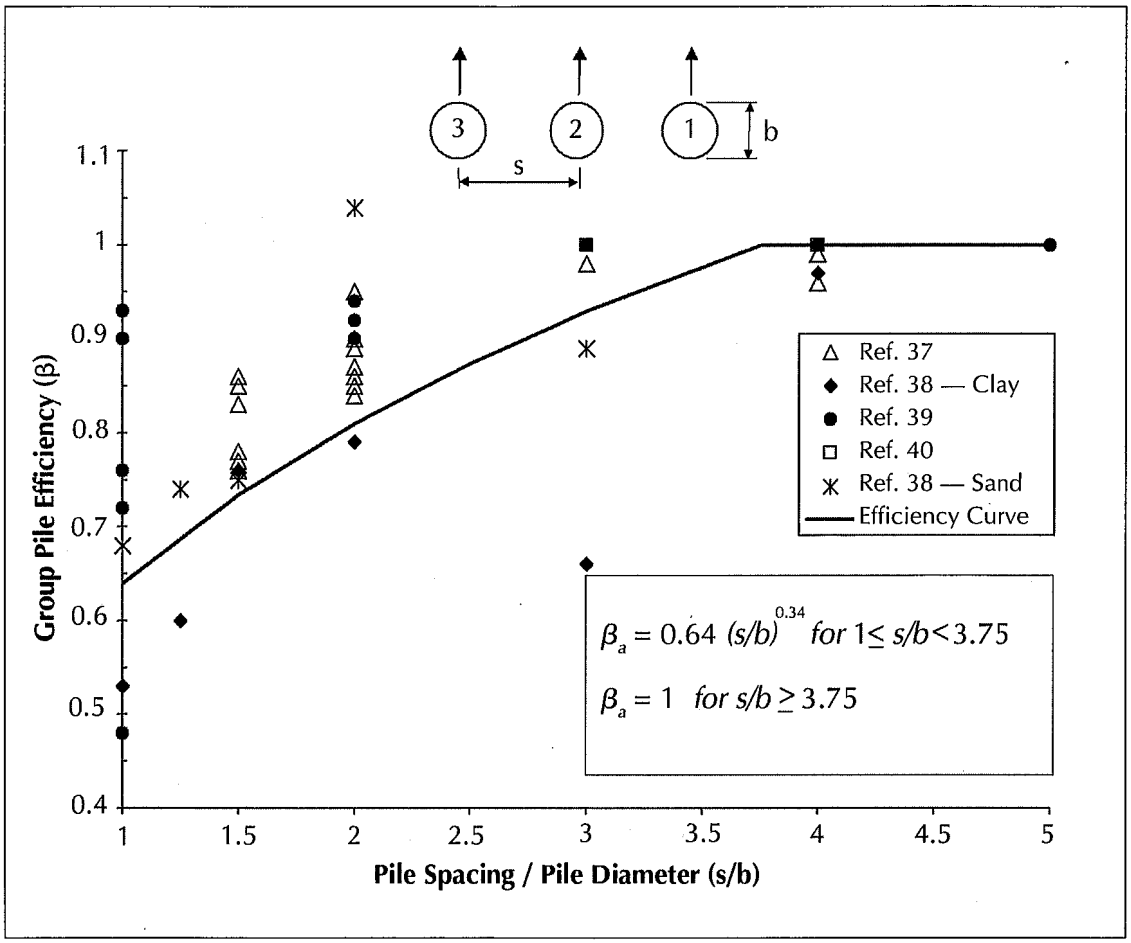

FIGURE 14. Curve giving reduction factor, β_a, for piles in a row.

study provided significant guidance in the recommendations that follow. The current recommendations are presented in Figures 14 through 16, where experimental data are plotted along with the equations for the following cases: piles in a row, leading piles in a line and trailing piles in a line — all as a function of the relative spacing s/b, where s is the center-to-center spacing and b is the diameter of the pile. (The data in the figures are derived from a number of references as shown.[37–42]) The aim of employing the recommendations of close spacing is to obtain a value f for each of the piles in a group that may be used to modify p-y curves to account for close spacing. The p-y curves for each of the piles in a group may be modified as shown in Equation 9:

$$p_{gi} = p_{spi} f_i \qquad \textbf{(9)}$$

where:

p_{gi} = the modified values of p, point by point, for pile i;

p_{spi} = values of p for isolated pile for pile I, and

f_i = modification factor for pile i, in the group (value is less than 1).

The value of f for each pile in a group is obtained by multiplying the values of β as found in Figures 14 through 16. For a pile that is neither in line or side by side, an expression is derived for piles that are *skewed*, as shown in Figure 17 (on page 22) where the skew angle is given by the angle ϕ. The sketch and the equation in the figure show the procedure for accounting for the skew. The value of f_4 for Pile 4 in the group shown in Figure 18 (on page 22) is equal to

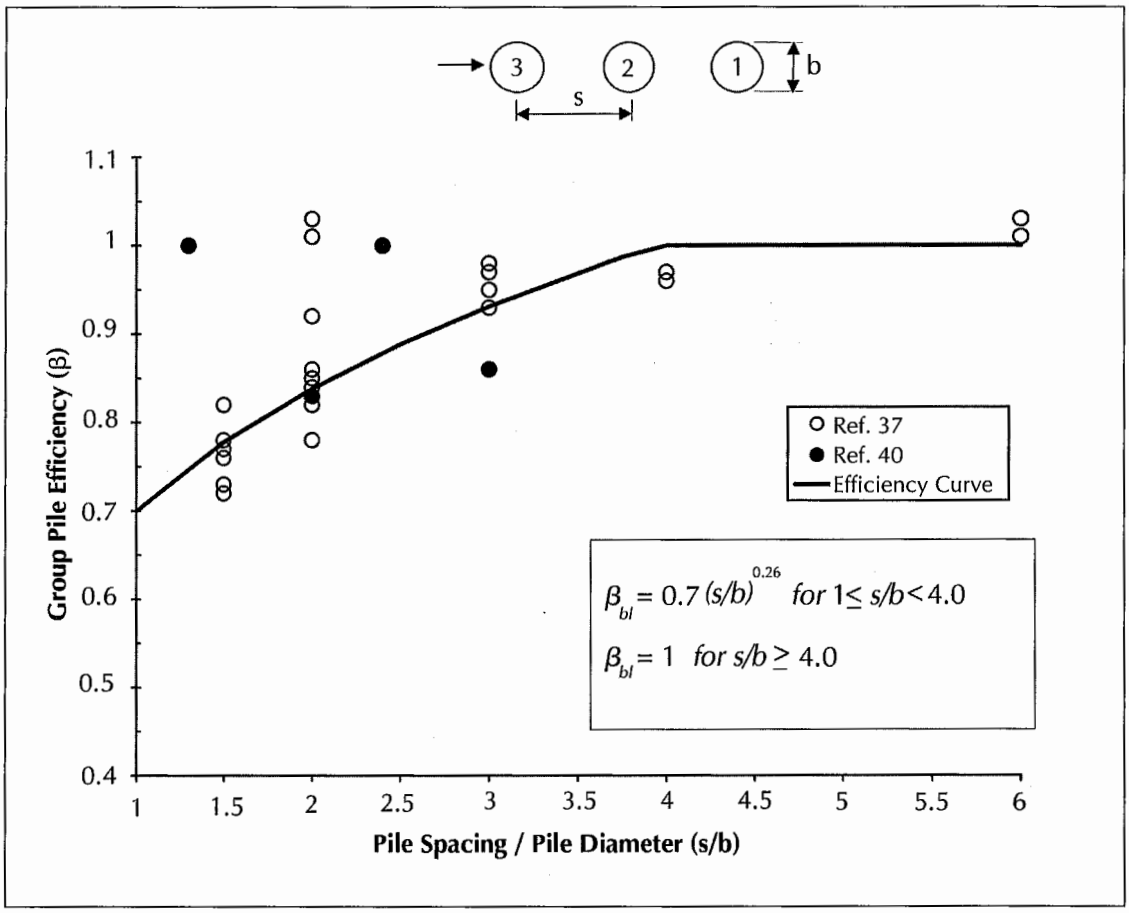

FIGURE 15. Curve giving reduction factor, β_{bl}, for leading piles in a line.

$\beta_{34}(sidebyside)\beta_{24}(trailing)\beta_{64}(leading)$ $\beta_{14}(skew)\beta_{54}(skew)$.

Referring to Figures 14 through 16, the following values are computed: β_{34} is equal to (0.42)(2.0)0.34, or 0.8101; β_{24} is equal to (0.48)(3.0)0.38, or 0.7287; and, β_{64} is equal to (0.70)(3.0)0.26, or 0.9314. For the skewed piles, the distance r is equal to 3.606 b and the angle ϕ is equal to 33.69°. Substituting into the equation in Figure 17 β_{14} equal to 0.8509 and β_{54} equal to 0.9809, then f_4 is equal to (0.8101)(0.7287)(0.9314)(0.8509)(0.9809), or 0.4589

Each of the values of p for the single, or isolated, pile is multiplied by the factor 0.4589 to obtain values of p for a pile in a group. This example shows that computations by hand are tedious; therefore to speed calculation the computations are included in the code for the computer program GROUP. The engineer should note that the exercise shows that individual piles in a group will sustain much less load than isolated piles. While there is no doubt that piles that are closely spaced will behave less well than isolated piles due to the transfer of stresses through soil, the scatter in the data in Figures 14 through 16 is significant and several relevant parameters are omitted. Tests of a group of piles under lateral load will be very expensive but such tests could be considered for a large project.

Group of Piles Under Three-Dimensional Loading

The pile group is among the problems in soil-structure interaction for which a solution has been obtained. The coordinate systems, along with the loading, are shown in Figure 19.[43] The pile cap is assumed to be rigid and a set of equations can be written where the

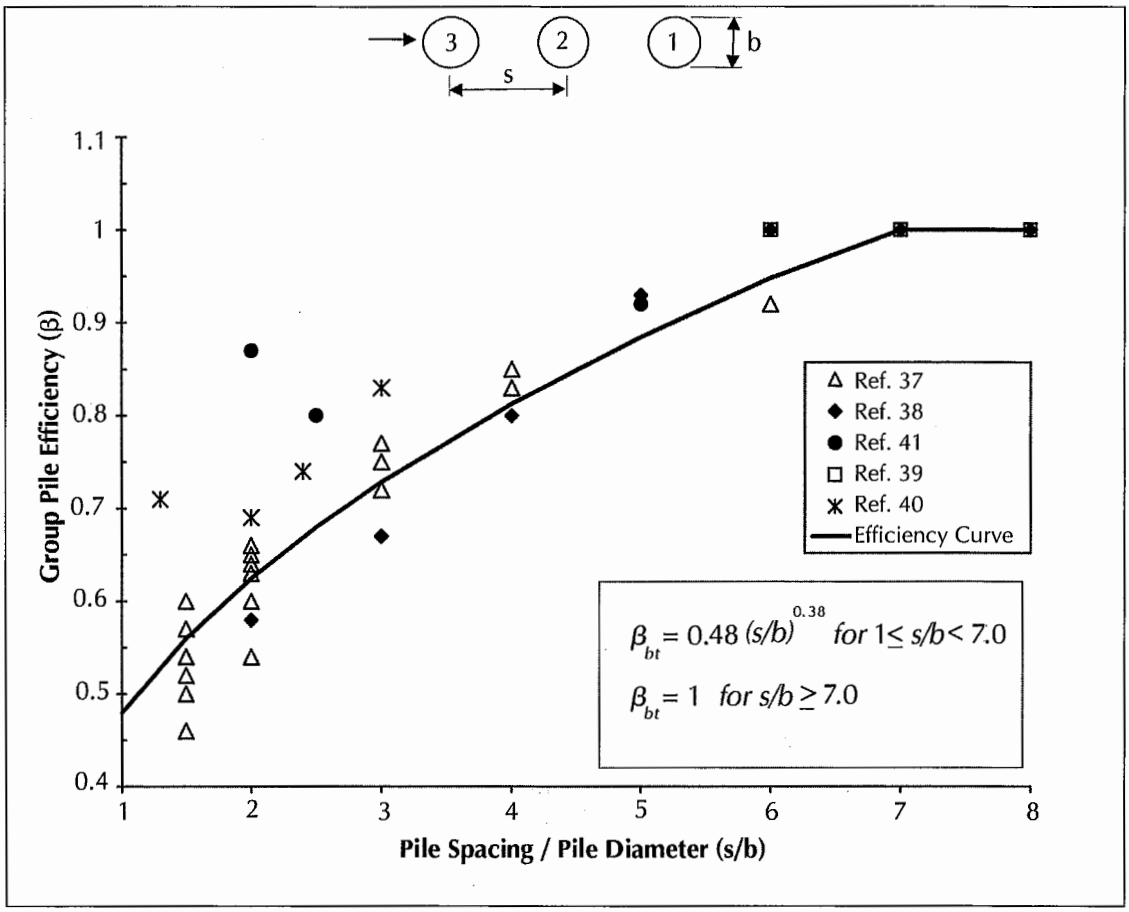

FIGURE 16. Curve giving reduction factor, β_{bt}, for trailing piles in a line.

applied loads are in equilibrium with the resistances at the pile heads. The pile-head resistances may be computed with procedures presented herein for axial load, lateral load and torque, taking close spacing into account. Because of the non-linearity of the soil, and perhaps of the pile material, iteration must be employed in achieving a solution.

An example of a pile-supported bridge bent is presented to illustrate the capability available to the engineer to investigate a number of parameters that may be addressed. The placement and orientation of the supporting pipe piles are shown in Figure 20 (on page 24). The figure shows the cap to be embedded in the soil but resistance against the cap is ignored. The problem becomes a piled raft if the reaction of the soil against the base of the cap is considered. The piles are steel pipe 30 inches in diameter with a wall thickness of 0.75 inches and a penetration of 94 feet. The strength of the steel was 36 ksi. Three layers of soil were assumed to exist at the site: 10 feet of soft to medium silty clay with an undrained shear strength of 900 psf at the top of the layer to 1,140 psf at the bottom; 35 feet of loose to compact sand with a friction angle of 33° at the top and 36° at the bottom of the layer; and a stratum of very stiff clay with a undrained shear strength of 4,000 psf to a depth of 167 feet. The water table was assumed to be at or near the ground surface and the submerged unit weight of each of the strata was assumed to be 60.5 pcf.

The curves showing the computation of the response of a single pile to axial load are shown in Figure 21 (on page 25). The failure load in compression is 1,430 kips and in tension is 1,260 kips. The pile-head movement to

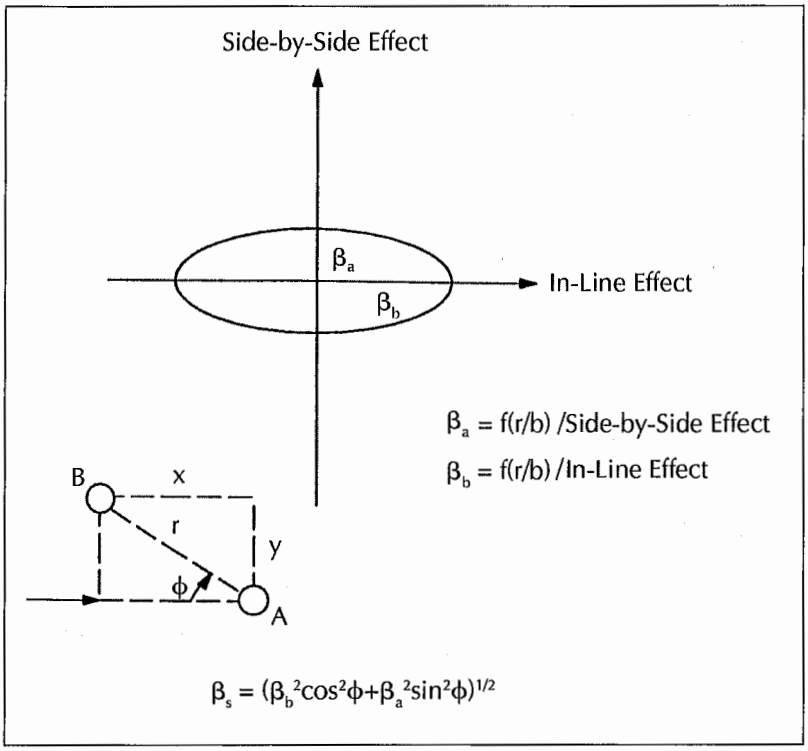

FIGURE 17. A system for computing the reduction factor for skewed piles.

achieve these loads is more than 2.5 inches. The curves are presented to allow the determination of failure of one of the piles in compression or tension and may be termed a geotechnical failure. Failure due to the development of a plastic hinge is assumed to occur when the combined stress becomes equal to 36 ksi and may be called a structural failure.

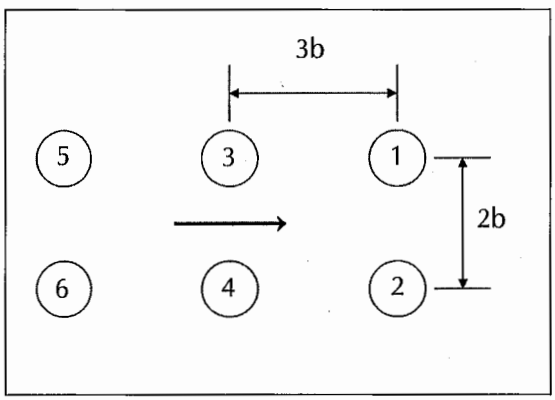

FIGURE 18. Pile group for example computations.

The loadings shown in Figure 20 are the so-called "service" loads or the sum of the dead and live loads during normal operating conditions. The matter of the loading of a structure needs careful attention and may require a considerable amount of time from an experienced engineer, especially if load- and resistance-factor design (LRFD) is being employed. For the present example, the service loads are factored upward to find the loading that causes failure, either by causing a pile to be overloaded or the presence of a plastic hinge. Some agencies define "failure" as the loading that produces a given deflection, say one-half inch. The writer prefers to define failure as noted and then to consider the movement of the piles and the structure under the service load.

Table 2 shows the axial load and maximum combined stress for each pile in the group for the service loads, along with the movement of the origin of the coordinate system. Table 3 (on page 26) shows similar information for the factored loading that caused failure. An examination of Tables 2 and 3 shows that none of the piles for the load factor of 2.0 reached the ultimate axial load and only one, Pile 8, reached the stress to cause a plastic hinge. If the loading is repetitive, the engineer may decide that the load factor of 2.0 constitutes the failure condition and then decide whether or not the design is adequate. If only a small number of the ultimate loads are expected during service, the engineer may decide to do a "push-over" analysis to find the load factor at which the foundation would collapse.

A further evaluation of the data in Tables 2 and 3 leads to some interesting observations.

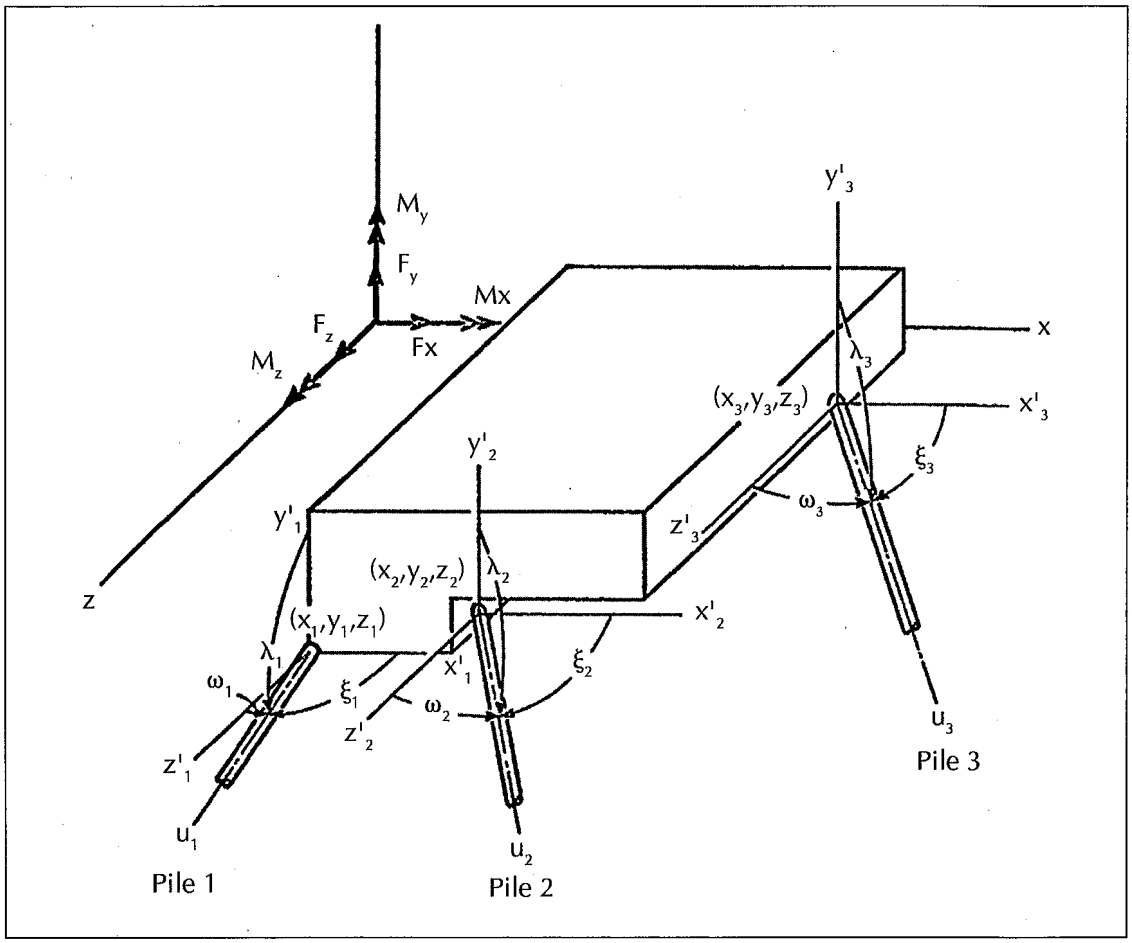

FIGURE 19. Coordinate system for a three-dimensional group of piles.

The engineer may investigate a number of parameters to seek a solution at minimum cost presuming that information on the cost of construction is available. The diameter, spacing and penetration of the piles may be modified. The use of piles of a different type may be investigated. Soil properties are seldom given in such specific terms as employed in the example. Analyses can be made using lower-bound values and upper-bound values to gain information on the desirability of a superior investigation of soil parameters.

A further point of interest involves the penetration of the pipe piles into the cap. For the present analyses, the pile heads were assumed to be free to rotate. The bending-moment curves for a free-head pile and a fixed-head pile are shown in Figure 22 (on page 26). The difference is dramatic, indicating the need to know the correct boundary condition. Conventional logic states that a small penetration into the pile head, just enough to resist the shear, is a free-head pile and a penetration of two or three diameters constituted a fixed-head pile. Actually, any pile-head penetration likely causes some rotational restraint and a fully fixed-head condition cannot be obtained. A model such as the one in Figure 23 (on page 27) is being used to work out the rotational restraint as a function of pile, the reinforced-concrete cap, amount of penetration and magnitude of loading. The computer code, ATENA, is being employed.[44]

Piled Raft

One of the most challenging problems in SSI is the piled raft. A structure (see Figure 24 on page 28), perhaps a high-rise building, is supported

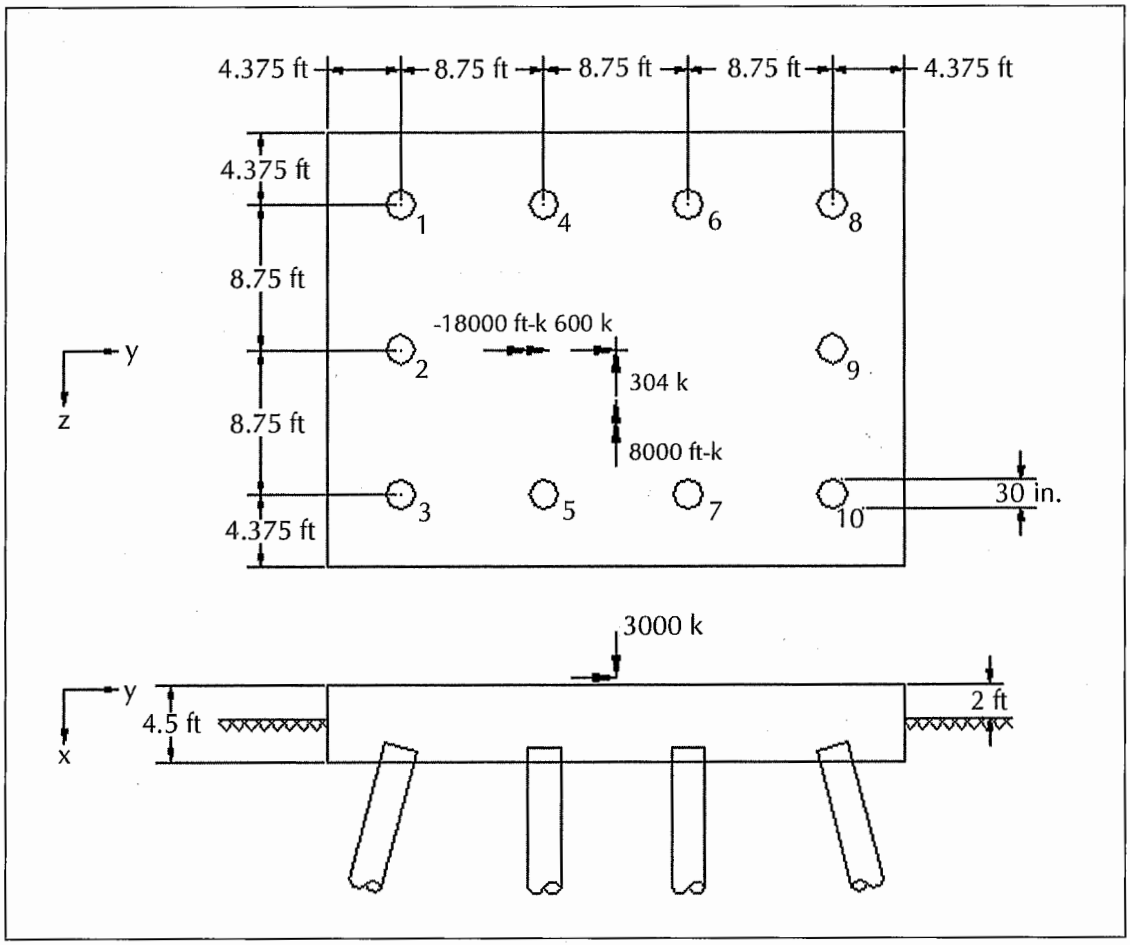

FIGURE 20. A pile-supported bridge bent.

both by piles and by a mat foundation. Considering each of these foundation elements separately leads to the conclusion that interaction is inevitable. The mat alone is certainly affected by the presence of the piles because the foundation is much stiffer than with the soil alone. The piles alone are affected by the earth pressure from the mat because the increased lateral stress on the piles affects the capacity in size resistance. The problem can be solved by using the finite-element method where appropriate elements are used to model the piles and the soil is modeled by softer elements.

A number of high-rise buildings in Frankfurt, Germany, were founded on piled rafts and extensive observations were made of the behavior of their foundations (see Figure 25 on page 29).[45,46] One of those buildings was Westendstrasse 1 and its foundation plan is shown in Figure 26 (on page 30). The raft had a thickness of 4.5 meters and supported a tower of approximately 208 meters in height. From the use of the instruments, the authors were able to determine the load shared by the raft and the piles. In terms of short-term settlement, the raft is far more flexible than the piles; therefore, the addition of piles to the foundation favorably affected the settlement of the structure.

The foundation was modeled with finite elements and Figure 27 (on page 30) shows the comparison of settlement from computation and from the field. The agreement is excellent. The computer analysis shows the deflection across the structure, as indicated in Figure 28 (on page 31). The movement of the raft was sufficient to develop the full resistance of the piles with a considerable portion of the load

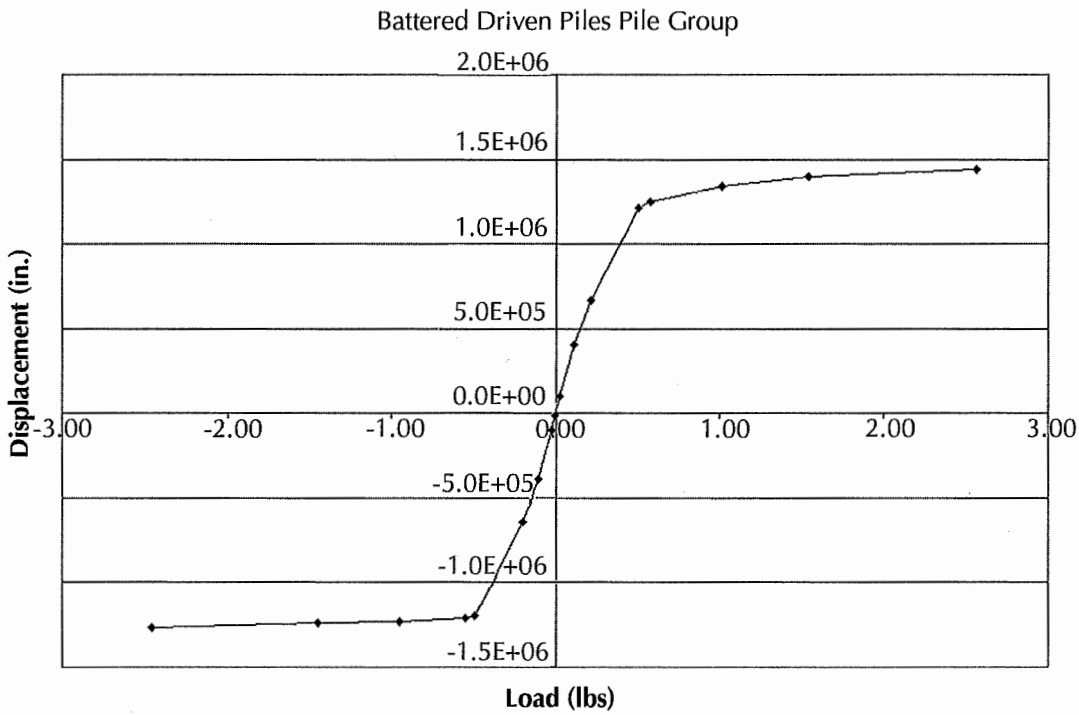

FIGURE 21. Axial load versus displacement for a single pile in a group.

TABLE 2.
Results From Service Loading

Pile No.	x_t (in.)	y_t (in.)	f_{max} (kips)	P_x (kips)
1	0.138	0.465	14.3	474
2	0.044	0.458	10.1	173
3	–0.054	0.443	10.0	–208
4	0.182	0.444	15.6	598
5	0.020	0.445	8.3	88
6	0.166	0.444	14.8	548
7	0.004	0.445	7.1	18
8	0.235	0.406	17.4	710
9	0.140	0.428	14.4	479
10	0.043	0.444	10.1	170

Note: Movement of coordinates: x = 0.093 in., y = 0.448 in.

TABLE 3.
Results From Load Factor = 2

Pile No.	x_t (in.)	y_t (in.)	f_{max} (kips)	P_x (kips)
1	0.164	1.477	27.6	541
2	0.082	1.487	25.2	303
3	–0.008	1.498	20.3	–37
4	0.215	1.460	29.3	674
5	0.266	1.460	30.7	767
6	0.155	1.459	26.6	517
7	0.205	1.460	28.5	648
8	0.417	1.402	36.0	1050
9	0.332	1.426	34.1	891
10	0.244	1.446	31.8	728

Note: Movement of coordinates: x = 0.210 in., y = 1.424 in.

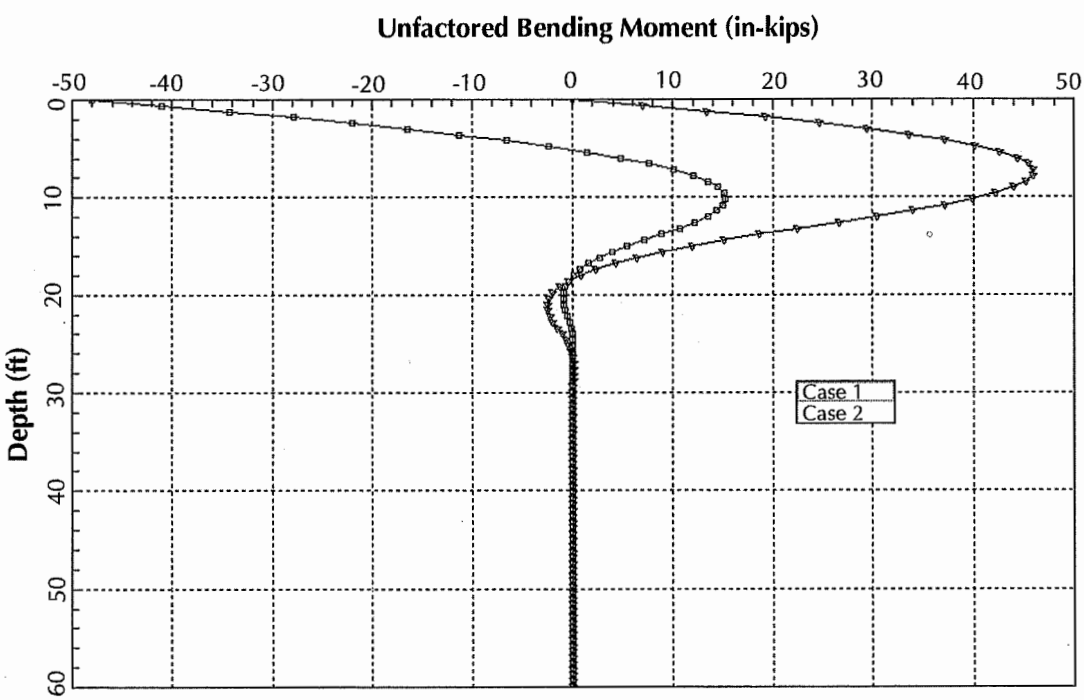

FIGURE 22. Typical bending moment curves for free-head and fixed-head piles.

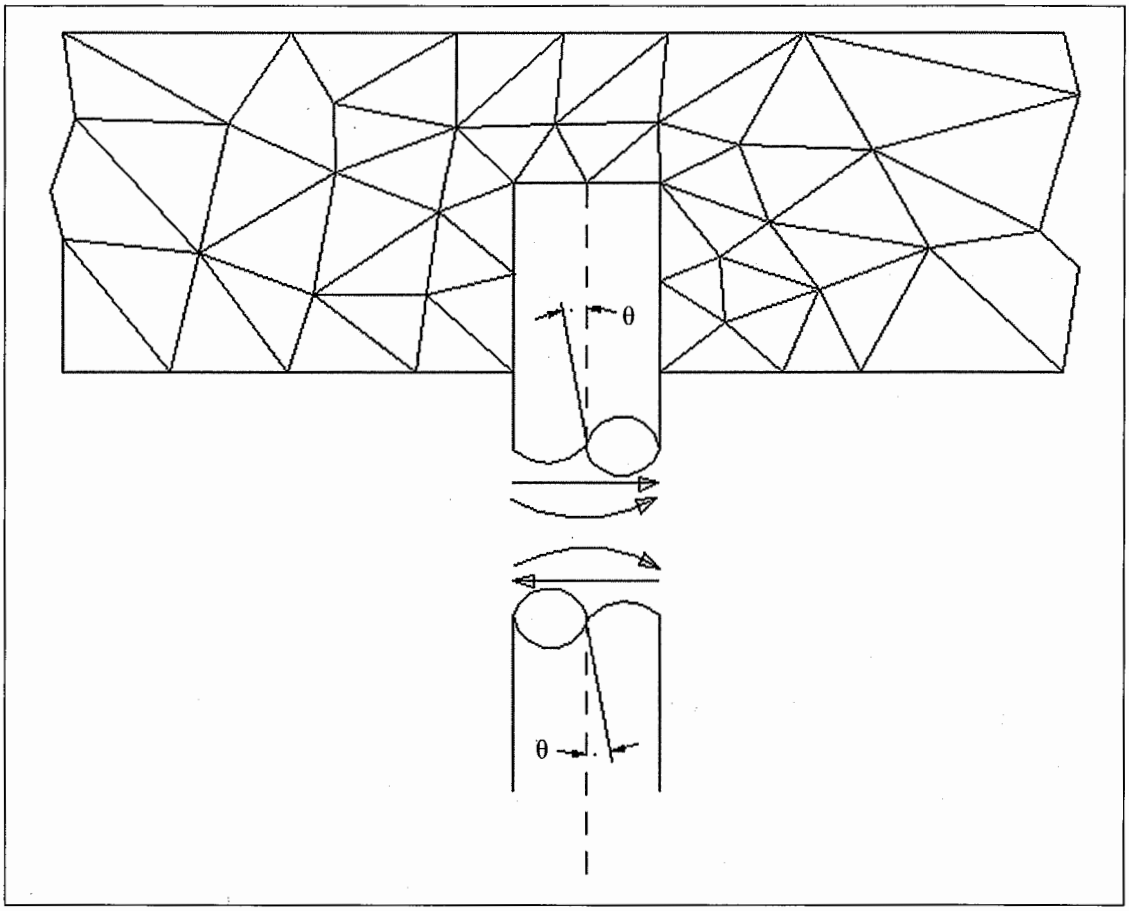

FIGURE 23. A finite-element model for solving for rotational restraint.

on the piles being transferred in end bearing, as shown by Figure 29 (on page 31), where the finite-element model reveals a stress bulb in the zone of the base of the piles.

For the analysis of Westendstrasse 1, linear finite-elements were employed because for much of the soil the stress-strain curve was judged to be in the linear range. Three-dimensional, non-linear finite elements can be run with a PC but runs for many problems will require several hours. The use of a PC for such problems will become more practical as the PC continues to gain in computational power.

Foundations Under Dynamic Loading

The important area of the response of foundations to dynamic loading has not been neglected by engineers in the development of SSI. A number of the standard finite-element codes can deal with inertia effects and are adaptable to the solution of dynamic problems. The computer code DynaMat can solve for the response of a mat foundation to vibrating machines considering the geometry of the foundation, the embedment depth, the material and radiation damping of the soils, the variation of soil properties with depth, and the interaction between the soil and the foundation. The three-dimensional, hybrid, finite-element method is used to compute the dynamic stiffness matrices for rigid foundations of circular or rectangular shapes. The analytical technique is based on the method proposed by Lin and Tassoulas[47] and results from DynaMat are in excellent agreement with those obtained by techniques proposed by Tassoulas and Kausel,[48] as well as by Chen.[49]

The computer program DynaN is based on the improved Novak Method, where a non-

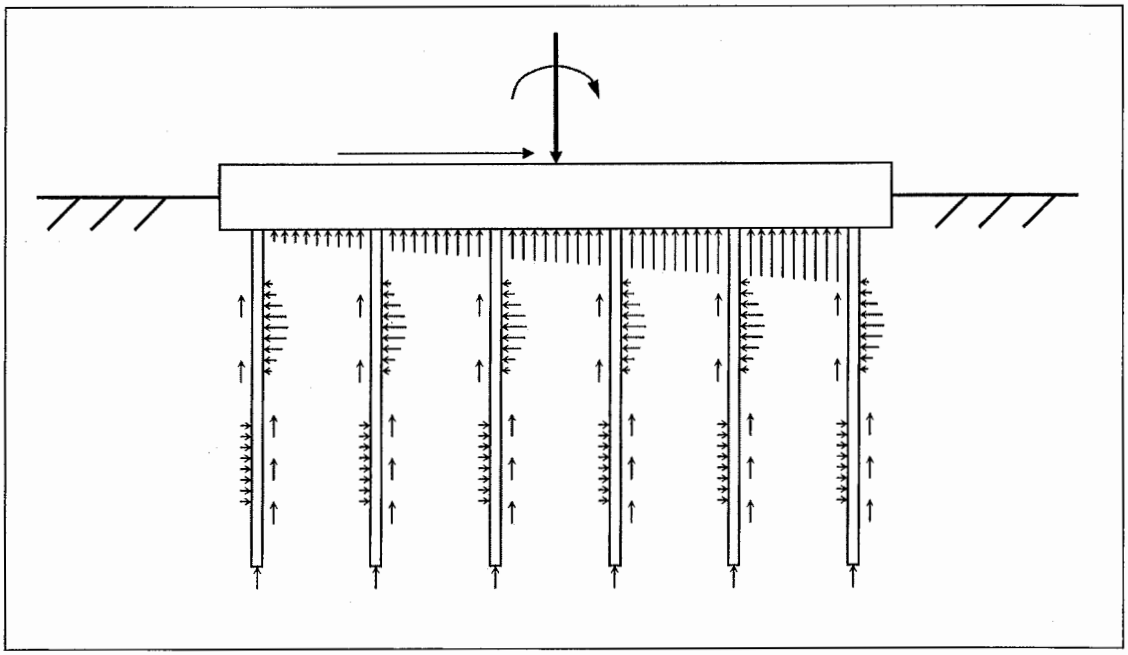

FIGURE 24. Typical design of a piled raft structure.

reflective boundary is formed between the near field and the far field to account for the mass of soil in the boundary. The program yields the dynamic response of both shallow and deep foundations under harmonic, transient and random loadings. Rotating or reciprocating machines, earthquake, wind, blast, sea waves and other sources can produce such loadings. The computational method has been applied to important problems in engineering practice.[50,51] In the development of the method, a series of dynamic experiments were performed on full-scale mat foundations[52] and on full-scale piles.[53,54]

Current Challenges for Civil Engineers

With a moderate expense, the response of many structures to gravitational, traffic and environmental loads can be observed. The making and reporting of such observations can be a valuable contribution to the profession and can further the development of knowledge of soil-structure interaction. Observations can be made by using traditional instrumentation but new instrumentation is being developed regularly. Jessica Binns writes in *Civil Engineering* that ground monitoring is possible using fiber optics sensors attached to a cable (as reported by Tarek Abdoun at Rensselaer Polytechnic Institute).[55] She also writes that Daniel Farhey, University of Dayton, has reported on the development of a wireless sensor system that may be used to investigate the response of a bridge to traffic and other loading.[56] John Dunnicliff has authored for a number of years the section in *Geotechnical News*, Geotechnical Engineering News, and has reported much useful information. Observations of completed structures can now be made with confidence by using many types of instrumentation available in the marketplace.

Too frequently soil investigations are given insufficient attention. Perhaps price competition has led to fewer borings and fewer in situ and laboratory tests. The result may not be a failure of the foundation but failure, nevertheless, if the foundation is much more expensive than necessary. Putting the lessons learned from Casagrande into use on evaluating soil properties allows for the application of the techniques of soil-structure interaction with obvious advantages.

Occasions may arise when engineers can give support to research to further knowledge

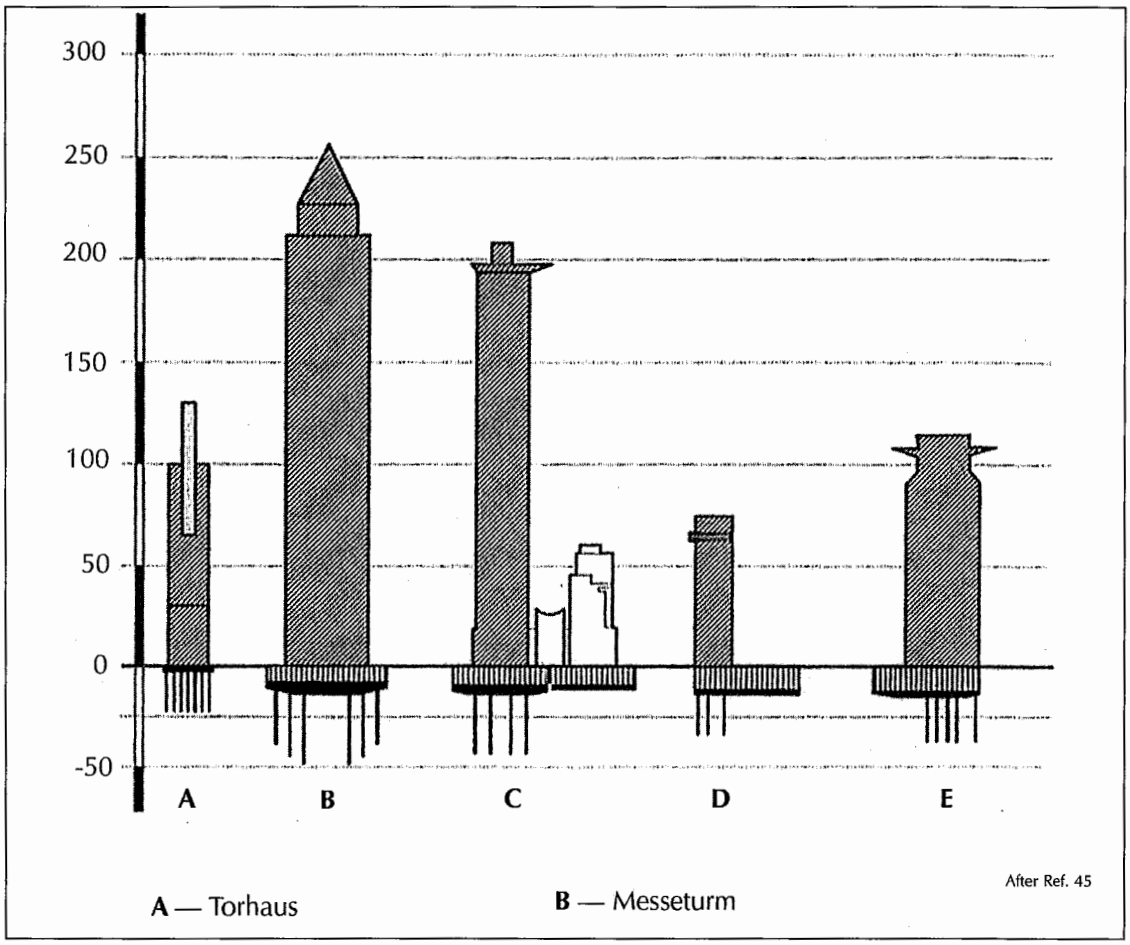

FIGURE 25. High-rise buildings in Frankfurt with piled raft foundations.

of SSI. Many useful areas exist. For example, most of the evidence regarding the influence of pile installation on soil properties is indirect. But methods and tools exist to obtain direct evidence of how driving a pile or installing a drilled shaft will modify the properties of the supporting soil. Presently, empirical parameters are used to modify the properties of soil to reflect pile installation. Later, when research allows for a solution of the problem, a geotechnical engineering student can be imagined asking, "Professor did you mean to say that during the last century *piles were designed based on the in situ properties of the soil?*"

As may be surmised, the technology of SSI is attracting research in many quarters[57,58] and remaining abreast of all such activity takes a sustained effort. Engineers in geotechnics and structures, and others, would be assisted immensely if the United States had a central agency to engage in research and to collect and collate information on such topics as soil-structure interaction, for example. The writer had an occasion to make an extended visit to the British Building Research Station and had useful visits to the Laboratoire Central des Ponts et Chaussées in France, geotechnical institutes in the Scandanavian countries, and similar organizations in India and Pakistan. The United States could benefit from the existence of such an organization.

Stepping Into the Future

Application of available tools to develop information allowing improved methods of analysis is presently possible. Many such tools are currently available, such as ATENA, but

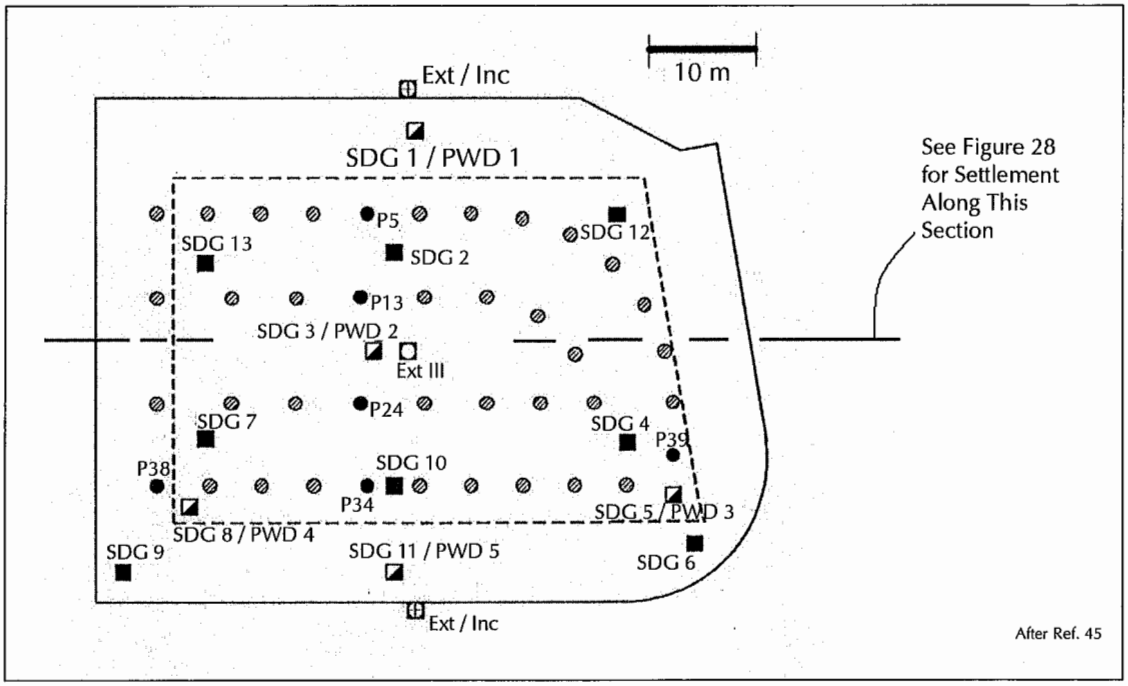

FIGURE 26. Pile locations at Westendstrasse 1.

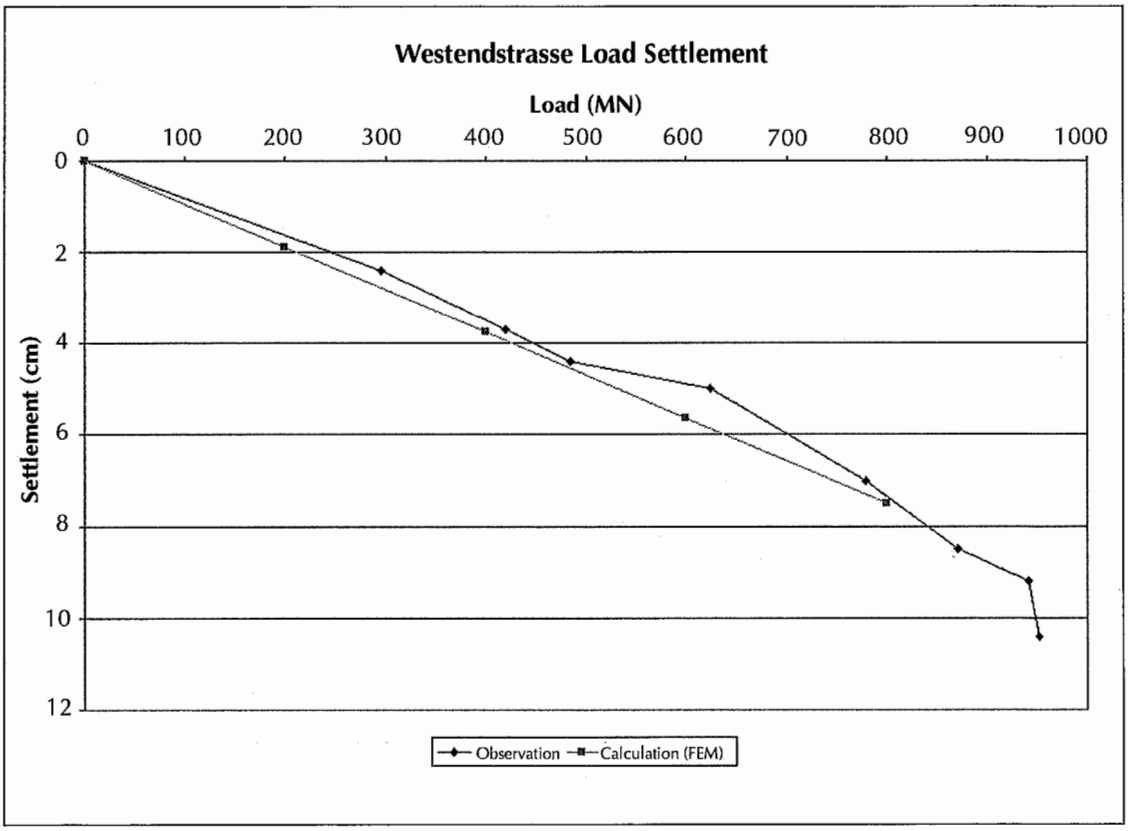

FIGURE 27. Load settlement at Westendstrasse 1.

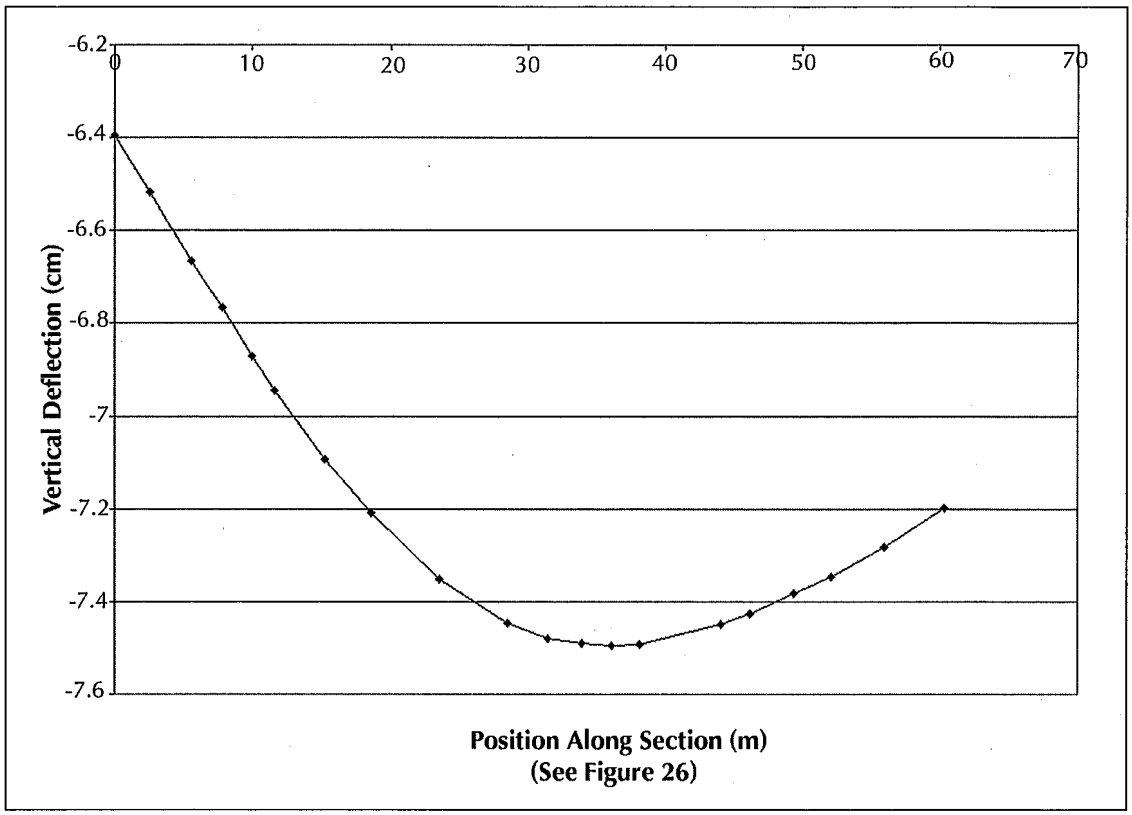

FIGURE 28. Settlement across a piled raft.

the effort in implementing such software should not be minimized. The theory should be understood and appropriate checks must be devised, preferably employing hand computations, to ensure correct results.

It is not too difficult to envision a computer program that will solve simultaneously the behavior of the foundation and the superstructure, accounting for a wide set of loadings, allowing the exploration of significant parameters, considering non-linearity as desirable and necessary, providing simplified input, and producing easily understood output in tabular and graphical forms. Such comprehensive software is well within the capabilities

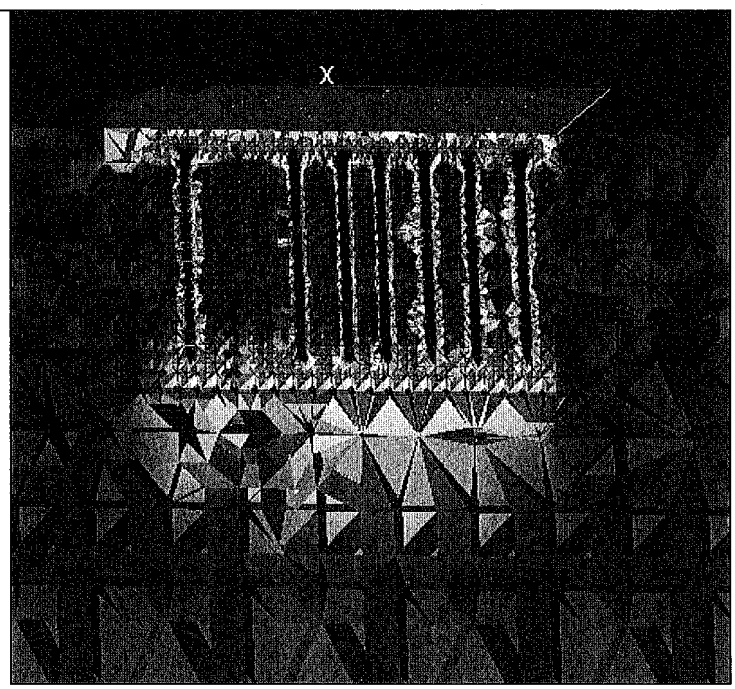

FIGURE 29. Stress bulb region produced by a piled raft system.

of many civil engineers to develop and will be seen in time. However, an enormous effort is necessary in performing the necessary verification, checking for adherence to building codes, providing example solutions with confirming experimental data, maintaining the code by responding to the inevitable "bugs," and writing and editing the supporting manuals, and preparing regular upgrades. Soil-structure interaction, more advanced than at present, would be a part of such a program. Such software will exist in the future and the future may already be here in some instances. However, the biggest problem may be finding users willing to pay the necessary fees that permit this software to be developed.

Current versions of the software based on the concept of soil-structure interaction are well supported by existing technology and even better versions of these computational methods are sure to appear in the future.

Conclusions

The contributions of a number of investigators to SSI have allowed the development of a number of useful analytical tools. Procedures based on the concept of SSI are in use widely and are important components in the solution of a number of important problems. SSI has attracted the interest of investigators in many countries and improvements are regularly being suggested. The future of SSI is bright and is expected to be more important in the future to geotechnical and structural engineers.

ACKNOWLEDGEMENTS — *The author thanks colleagues at Ensoft, Inc., for many contributions to the technology presented in this article. Thanks are also given to many investigators, some referenced here, who have contributed to the advancement of SSI. This article was originally presented to the Boston Society of Civil Engineers Section/ASCE as the Casagrande Lecture given on October 13, 2004.*

LYMON C. REESE *has done extensive research in the field of geotechnical engineering, principally concerning the behavior of deep foundations. He has conducted pioneering work in performing field studies with instrumented piles and drilled shafts, and has developed analytical methods now widely used in the design of deep foundations. He has authored over 400 technical papers and reports, and presented numerous invited lectures and talks around the world. Dr. Reese was elected to the National Academy of Engineering in 1974, and was elected an Honorary Member of ASCE in 1984. He spent three years on the faculty at Mississippi State University before joining the faculty of the University of Texas in 1955. He was Chairman of the Department of Civil Engineering from 1965 until 1972, and Associate Dean of the College of Engineering from 1972 to 1979. He continues at the University of Texas as the Nasser I. Al Rashid Chair Emeritus and Professor of Civil Engineering.*

REFERENCES

1. Reese, L.C., "Load Versus Settlement for an Axially Loaded Pile," *Proceedings, Symposium on Bearing Capacity of Piles*, Central Building Research Institute, Roorkee, India, 1964.

2. Whitaker, T., & Cooke, R.W., "An Investigation of the Shaft and Base Resistance of Large Bored Piles in London Clay," *Proceedings, Symposium on Large Bored Piles*, Institution of Civil Engineers, London, 1966.

3. Reese, L.C., & O'Neill, M.W., *Drilled Shafts: Construction Procedures and Design Methods*, Manual Prepared for the U.S. Department of Transportation, Federal Highway Administration, Office of Implementation, McLean, Virginia, 1988.

4. Christian, J.T., "Soil-Foundation-Structure Interaction," *Analysis and Design of Building Foundations*, Envo Publishing Co., 1976.

5. Skempton, A.W., "The Bearing Capacity of Clays," *Proceedings, Building Research Congress*, Division 1, London, 1951.

6. Terzaghi, K., "Evaluation of Coefficients of Subgrade Modulus," *Géotechnique*, Vol. 5, 1955.

7. Schmertmann, J.H., "Static Cone to Compute Static Settlement Over Sand,"*Proceedings, American Society of Civil Engineers*, Vol. 96, No. SM3, May 1970.

8. Schmertmann, J.H., Hartman, J.P., & Brown, P.R., "Improved Strain Influence Factor Diagrams," *Proceedings, American Society of Civil Engineers*, Vol. 104, No. GT8, August 1978.

9. Gleser, S.M., "Lateral Load Tests of Vertical Fixed-Head and Free-Head Piles," *Symposium on Lateral Load Tests of Piles*, ASTM Special Publication 154, 1953.

10. Reese, L.C., & Matlock, H., "Numerical Analysis of Laterally Loaded Piles," *Proceedings, II Structural Division Conference on Electronic Computation*, Pittsburgh, Pennsylvania, ASCE, 1960.

11. Matlock, H., & Reese, L.C., "Generalized Solutions for Laterally Loaded Piles," *Transactions, ASCE*, Vol. 127, 1962.

12. Matlock, H., "Correlations for Design of Laterally Loaded Piles in Soft Clay," *Proceedings, II Annual Offshore Technology Conference*, Houston, Texas, OTC 1204, 1970.

13. Reese, L.C., Cox, W.R., & Koop, F.D., "Field Testing and Analysis of Laterally Loaded Piles in Stiff Clay," *Proceedings, VII Annual Offshore Technology Conference*, Houston, Texas, OTC 2312, 1975.

14. Georgiadis, M., "Development of p-y Curves for Layered Soil," *Proceedings, Geotechnical Practice in Offshore Engineering*, ASCE, 1983.

15. Jamiolkowski, M., "Design of Laterally Loaded Piles," general lecture, *International Conference on Soil Mechanics and Foundation Engineering*, Tokyo, Japan, 1977.

16. Baguelin, F., Jézéquel, J.F., & Shields, D.H., *The Pressuremeter and Foundation Engineering*, Trans Tech Publications, 1978.

17. George, P., & Wood, D., *Offshore Soil Mechanics*, Cambridge University Engineering Dept., 1976.

18. Poulos, H.G., & Davis, E.H., *Pile Foundation Analysis and Design*, Wiley, New York, 1980.

19. Det Norske Veritas, *Rules for the Design, Construction, and Inspection of Offshore Structures*, Det Norske Veritas (Norway), 1977.

20. Reese, L.C., *Handbook on Design of Piles and Drilled Shafts Under Lateral Load*, FHWA, IP-84-11, 1984.

21. American Petroleum Institute, *Planning, Designing and Constructing Fixed Offshore Platforms*, (API, RP2A WSD) 20th edition, 1993.

22. Matlock, H., & Ripperger, E.A., "Measurement of Soil Pressure on a Laterally Loaded Pile," *Proceedings, ASTM*, Vol. 58, 1958.

23. Welch, R.C., & Reese, L.C., "Laterally Loaded Behavior of Drilled Shafts," *Research Report 3-5-65-89*, Center for Transportation Research, Bureau of Engineering Research, University of Texas at Austin, 1972.

24. Reese, L.C., & Welch, R.C., "Lateral Loading of Deep Foundations in Stiff Clay," *Journal of the Geotechnical Engineering Division*, ASCE, Vol. 101, No. GT7, 1975.

25. Nyman, K.J., "Field Load Tests of Instrumented Drilled Shafts in Coral Limestone,"unpublished master's thesis, University of Texas at Austin, May 1980.

26. Parker, Jr., F. & Reese, L.C., "Lateral Pile-Soil Interaction Curves for Sand," *Proceedings, International Symposium on the Engineering Properties of Sea-Floor Soils and Their Geophysical Identification*, Seattle, Washington, University of Washington, 1971.

27. Sullivan, W.R., Reese, L.C., & Fenske, C.W., "Unified Method for Analysis of Laterally Loaded Piles in Clay," *Numerical Methods in Offshore Piling*, Institution of Civil Engineers, London, 1980.

28. Bhushan, K., Lee, L.J., & Grime, D.B., "Lateral Load Tests of Drilled Piers in Sand," *Preprint*, ASCE Annual Meeting, St. Louis, October 1981.

29. O'Neill, M.W., & Murchison, J.M., "An Evaluation of *p-y* Relationships in Sand," report, American Petroleum Institute, PRAC 82-41-1, University of Houston, Texas, 1983.

30. O'Neill, M.W., & Gazioglu, S.M., "An Evaluation of p-y Relationships in Clays," report, American Petroleum Institute, PRAC 82-41-2, University of Houston, Texas, 1984.

31. Price, G., & Wardle, I.F., "Lateral Load Tests on Large Diameter Bored Piles," *Contractor Report 46*, Transport and Road Research Laboratory, Department of Transport, Crowthorne, Berkshire, England, 1987.

32. O'Neill, M.W., "Determination of Pile Head, Torque-Twist Relationship for a Circular Pile Embedded in Clay Soil," unpublished master's thesis, University of Texas at Austin, May 1964.

33. Stoll, U.W., "Torque Shear Test of Cylindrical Friction Piles," *Civil Engineering*, ASCE, April 1972.

34. Seed, H.B., & Reese, L.C., "The Action of Soft Clay Along Friction Piles," *Transactions, ASCE*, Vol. 122, 1957.

35. O'Neill, M.W., "Group Action in Offshore Piles," *Proceedings, Specialty Conference on Geotechnical Engineering in Offshore Practice*, ASCE, 1983.

36. Scott, V.M., "Interaction Factors for Piles in Groups Subjected to Lateral Loading," unpublished master's thesis, University of Texas at Austin, August 1995.

37. Cox, W.R., Dixon, D.A., & Murphy, B.S., "Lateral Load Tests of 25.4 mm Diameter Piles in Very Soft Clay in Side-by-Side and In-Line Groups," *Proceedings, Laterally Loaded Deep Foundations: Analysis and Performance*, ASTM, 1984.

8. Wang, S.T., & Reese, L.C., "Study of Design Method for Vertical Drilled Shaft Retaining Walls," *Research Report 415-2F*, Center for Transportation Research, Bureau of Engineering Research, University of Texas at Austin, 1986.

39. Franke, E., "Measurements Beneath Piled Rafts," keynote lecture, *ENPC-Conference on Deep Foundations*, Paris, March 1991.

40. Prakash, S., "Behavior of Pile Groups Subjected to Lateral Load," doctorial dissertation, University of Illinois, Urbana, 1962.

41. Schmidt, H.G., "Horizontal Load Tests on Files of Large Diameter Bored Piles," *Proceedings, XI International Conference on Soil Mechanics and Foundation Engineering*, San Francisco, 1985.

42. Shibata, T., Yashimi, and Kimura, M., "Model Tests and Analysis of Laterally Loaded Pile Groups," *Soils and Foundations*, Japanese Society of Soil Mechanics and Foundation Engineering, Vol 29, No. 1, 1989.

343. Awoshika, K., & Reese, L.C., "Analysis of Foundation With Widely Spaced Batter Piles," *Research Report 117-3F*, Center for Highway Research, University of Texas at Austin, February 1971.

44. Červenka, V., & Červenka, J., *ATENA Program Documentation, Part 2-1, User Manual for ATENA 2D, and Part 2-2, User Manual for ATENA 3-D*, Prague, 2003.

45. El-Mossallamy, Y., & Franke, E., "Pile Rafts-Numerical Modeling to Simulate the Behavior of Pile Raft Foundations," published by the authors, Darmstadt, Germany, 1997.

46. Franke, E., "Group Action Between Vertical Piles Under Horizontal Loads," *Proceedings, Deep Foundations Under Bored and Auger Piles*, Ghent, Belgium, 1988.

47. Lin, H.-T., & Tassoulas, J.L., "A Hybrid Method for Three-Dimensional Problems of Dynamics of Foundations," *Earthquake Engineering and Structural Dynamics*, Vol. 14, 1986.

48. Tassoulas, J.L., & Kausel, E., "Elements for the Numerical Analysis of Wave Motion in Layered Strata," *International Journal of Numerical Analysis in Engineering*, Vol. 19, 1983.

49. Chen, H.-T., "Dynamic Stiffness of Uniformly Embedded Foundations," *Geotechnical Engineering Research Report GR84-9*, Department of Civil Engineering, University of Texas as Austin, June 1984.

50. Han, Y.C., "Design of the Foundation of 5 x5 m Seismic Vibration Table," *Proceedings, 5th Canadian Conference on Earthquake Engineering*, Ottawa, 1987.

51. Han, Y.C., Wang, S., Chan, P., & Sprinkhuysen, A., " Design of an Elevated Compressor Table Top Structure Considering Soil-Pile-Structure Interaction," *Proceedings, Annual Conference of Canadian Society of Civil Engineering*, Regina, Saskatchwan, 1999.

52. Han, Y.C., "Coupled Vibration of Embedded Foundation," *Journal of Geotechnical Engineering*, ASCE, Vol. 115, No. 9, 1989.

53. Han, Y.C., & Novak, M., "Available Method for Nonlinear Vibration Analysis of Single Piles," *China Civil Engineering Journal*, Vol. 22, No. 3., 1989 [in Chinese].

54. Han, Y.C., & Novak, M., "Dynamic Behavior of a Pile Group," *China Civil Engineering Journal*, Vol. 25, No. 5., 1992 [in Chinese].

55. Binns, J., "Bridge Sensor System Delivers Results Quickly," *Civil Engineering*, September 2004.

56. Binns, Jessica, "Ground Monitoring System May Prevent Massive Losses in Natural Disasters," *Civil Engineering*, September 2004.

57. Ilyas, T., Leung, C.F., Chow, Y.K., & Budi, S.S. "Centrifuge Model Stody of Laterally Loaded Pile Groups in Clay," *Journal of Geotechnical and Geoenvironmental Engineering*, ASCE, Vol. 130, No. 3, March 1, 2004.

58. Kim, B.T., Kim, N.-K., Lee, W.J., & Kim, Y.S., "Experimental Load-Transfer Curves of Laterally Loaded Piles in Nak-Dong River Sand," *Journal of Geotechnical and Geoenvironmental Engineering*, ASCE, Vol. 130, No. 4, April 1, 2004.