General Design Details for Integral Abutment Bridges

Extensive damage caused by faulty or leaking bridge deck expansion joints has resulted in progressively increasing maintenance and rehabilitation costs. To avoid these problems, more than half of the state highway departments have developed guidelines for the design and construction of integral abutment bridges.

AMDE M. WOLDE-TINSAE &
LOWELL F. GREIMANN

TRADITIONALLY, a system of expansion joints, roller supports and other structural releases has been provided in highway bridges to permit thermal expansion and contraction. An example of a bridge with expansion joints is shown in Figure 1. The desirable characteristics of an expansion joint system are water-tightness, smooth rideability, low noise level, wear-resistance and resistance to damage caused by snowplow blades. However, the performance of many joint systems is disappointing. When subjected to traffic and bridge movement, they fail in one or more important aspects, most notably in water-tightness.

The flow of runoff water through open bridge deck joints or leaking sealed joints has been one of the major causes of extensive maintenance and costly rehabilitation work on bridges in general. The problem is especially aggravated in the snowbelt states, where runoff water contains highly corrosive chlorides. An estimated 12 million tons of sodium chloride and calcium chloride are used annually during wintertime de-icing operations in the United States.[1] This practice exposes bridge decks and substructural elements located near expansion joints to a highly aggressive corrosive environment.

Critical substructural elements that are commonly damaged by water runoff through expansion joints include steel girders and stringers, bearings, rollers and anchor bolts. In addition, reinforced concrete members such as piers and pier caps are often subjected to scaling and spalling caused by deck runoff through joints, which subsequently leads to the cor-

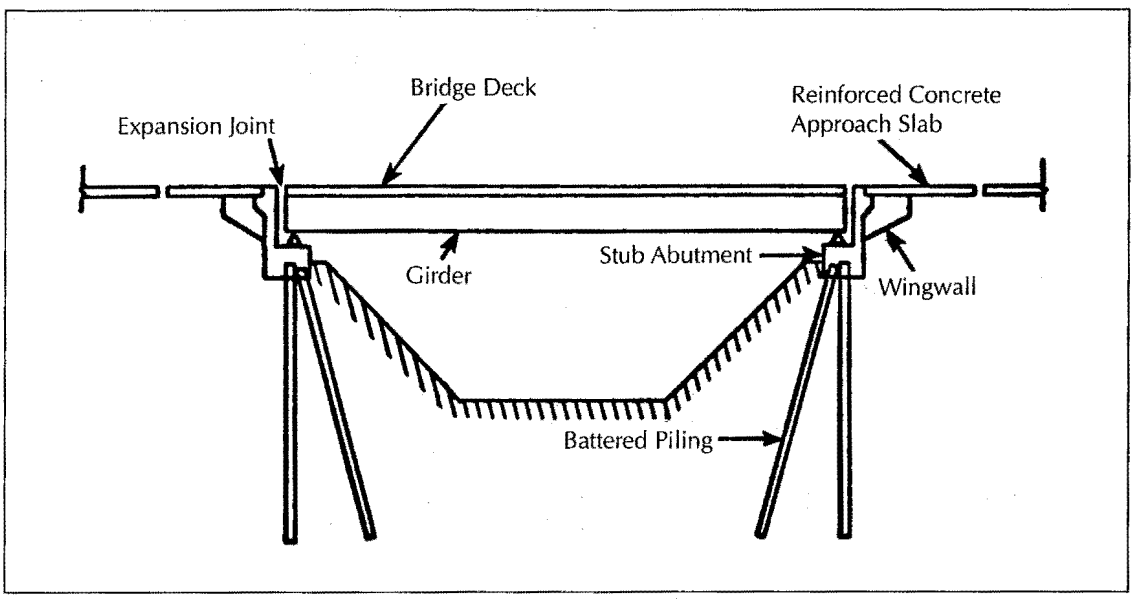

FIGURE 1. Cross-section of a bridge with expansion joints.

rosion of any exposed reinforcing steel.

In some bridges, troughs have been placed below open expansion joints to collect the runoff water and discharge it through drainpipes away from the structure. This solution does not seem to be viable because it introduces an additional item to clean and maintain. The original problem reoccurs as soon as accumulated roadway debris clogs the troughs and pipes, causing the runoff water to overflow. In the snowbelt states, accumulated sand and deicing chlorides further aggravate the problem by accelerating the clogging and corrosion process.

The problems with expansion joints became most noticeable during the late 1960s, when joint-related damage reached alarming proportions. An increased volume of traffic, along with more vehicles carrying heavier loads and traveling at higher speeds, made the rapid bridge deterioration near the joints readily apparent to users of the bridge and bridge inspectors alike. The increased cost of maintenance or replacement of these faulty expansion joints, along with the initial cost of their design, manufacture and installation continues to place a heavy burden on both the state highway agencies and the taxpaying public. The burden of these costs has led to the advancement of the case for continuous construction.

Continuity in steel stringer and other types of bridges has been an accepted practice since the early 1950s. In addition to the economies inherent in the use of continuous beams, wherein negative moments over interior supports serve to reduce midspan positive moments, one line of bearing devices was automatically eliminated at each interior support. The predominant problem with these continuous bridges was at the abutments where some kind of expansion joint was still used.

In order to alleviate the high costs associated with bridge maintenance and the rehabilitation of joints, several states began eliminating them altogether from bridges by building the girders integrally with the abutments. Figure 2 shows an example of a bridge with integral abutments and Figure 3 shows details of typical integral abutments. Each bridge is supported by a single row of vertical piles extending into the abutments. In addition to being aesthetically pleasing, integral abutments offer the advantage of lower initial cost as well as lower maintenance costs. Expensive bearings, joint material, piles for horizontal earth loads and leakage of water through the joints are all eliminated.

Today, more than half of the state highway agencies have developed design criteria for integral abutment bridges. Development of these bridges began on an experimental basis on rela-

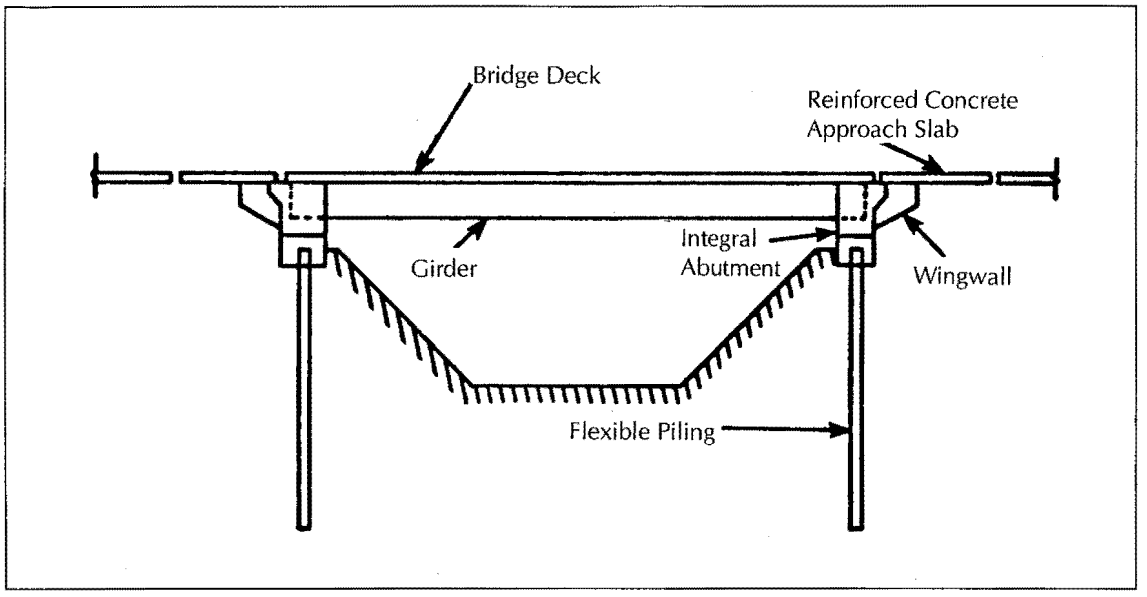

FIGURE 2. Cross-section of a bridge with integral abutments.

tively short bridges ranging from 50 to 100 feet in length. Because rational design guidelines were not available, any subsequent increase in allowable length was based on reports of the successful performance of prototype bridges in the field. As a result, each highway agency has developed its own unique length limits and other design criteria. In addition to the erratic limits for the allowable lengths of integral abutment bridges, design guidelines have also been lacking for the treatment of other essential components such as approach slabs, piles, pile caps, wingwalls, backfill and provisions for drainage.

Responses to previous surveys concerning the use of integral abutments have indicated

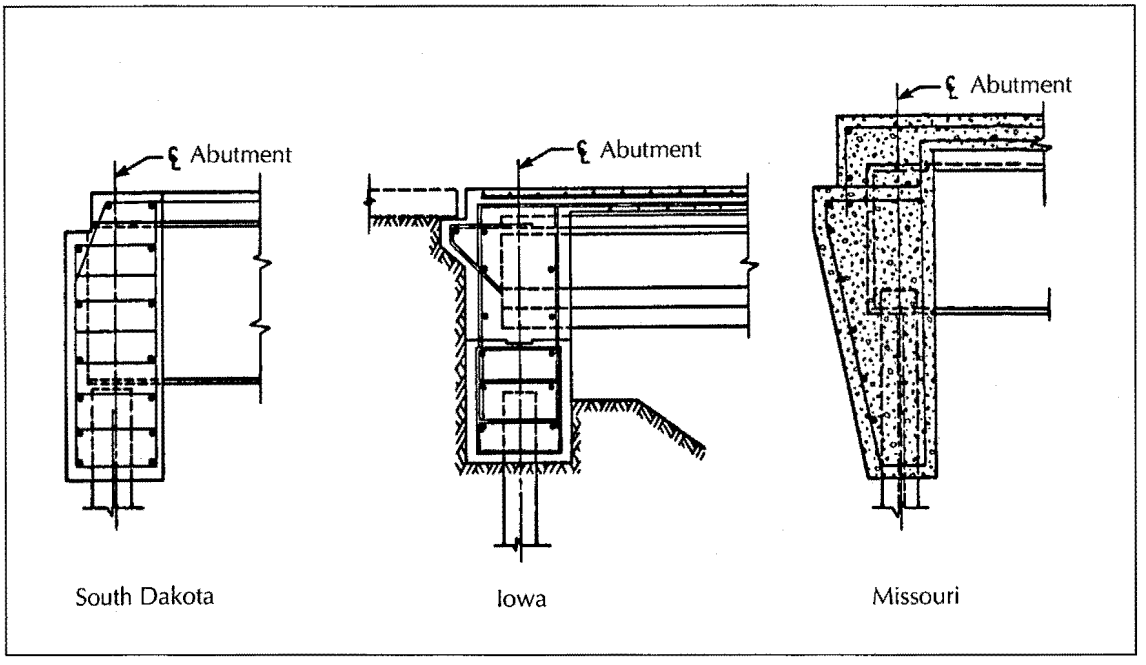

FIGURE 3. Typical integral abutment details.

that most state highway departments have their own limitations and criteria in designing integral abutments.[2,3] The bases of these limitations and criteria are shown to be primarily empirical. The use of integral abutments in bridge design has so far been accepted by 28 state highway departments and the District Construction Office of Federal Highway Administration (FHWA) Region 15. Information on general policy concerning integral abutment design, provision for bridge movement, approach slabs, wing-wall configurations and details, and general design details and guidelines by highway departments in Tennessee, New York, and California, and the Federal Highway Administration is provided from survey responses. A summary on current practice by all the 28 states and the District Construction Office of FHWA Region 15 is given in Table 1.

General Policy on Integral Abutment Design

Tennessee. Structures must be designed to accommodate the movements and stresses caused by thermal expansion and contraction. Bridge designers should not accommodate these movements by using unnecessary bridge deck expansion joints and expansion bearings. This solution can create more problems than it solves. Structural deterioration due to leaking expansion joints and frozen expansion bearings constitute major bridge maintenance problems.

To eliminate the problems associated with leaking expansion joints and frozen expansion bearings, bridges must be designed and constructed with continuous superstructures, fixed or integral bearings at the piers and abutments, and no bridge deck expansion joints unless absolutely necessary. When expansion joints are necessary, they are provided only at abutments.[4]

New York. The New York Department of Transportation currently has tentative integral abutment guidelines that list the design parameters that must be satisfied by designers if they elect to use an integral abutment type structure. Integral abutments are allowed on structures with span lengths up to 300 feet provided they satisfy the tentative guidelines. Span lengths between 300 and 400 feet are approved only on an individual basis.

The main concern regarding span length is the longitudinal movement and the large passive pressures that are generated as the structure expands against the compacted backfill. The general policy is to try to select a span arrangement and bearing types that result in approximately equal movements at each abutment. The 300-foot limitation results in movements that can safely be handled.[5]

California. The end diaphragm is an integral part of the bridge superstructure. Frequently, this diaphragm is extended below the soffit of the superstructure to rest directly on piles or on a footing. This type of support is an *end diaphragm abutment.* An end diaphragm abutment cannot to be used where the roadway on the structure is designed to carry storm water.[6]

Federal Highway Administration. Bridges with their overall length less than the following values should be constructed continuous and, if unrestrained, have integral abutments:

- Steel: 300 feet
- CIP: 500 feet
- Pre- or post-tensioned concrete: 600 feet

Greater values may be used when experience indicates that such designs would be satisfactory.[7]

Provision for Bridge Movement

Tennessee. The total superstructure movement should be based on the following design parameters:

- Concrete structures with 25 to 95°F temperature range, 0.0000060 coefficient of expansion and 0.505 inches/100 feet total movement.
- Steel structures with 0 to 120°F temperature range, 0.0000065 coefficient of expansion and 0.936 inches/100 feet total movement.

The total movement per hundred feet is applicable to the structure length measured from the theoretical fixed center of the structure.

When the total anticipated movement at an abutment is less than two inches and the abutment is not restrained against movement, no joint is required and the superstructure and

Table 1

Summary of Current Practice

State	Design Considerations: Piling Stresses Due to Lateral Movement Are Calculated	Design Considerations: Criteria for Maximum Length for Bridges With Integral Abutments	Design Assumptions & Details: Pile Head	Pile Cap	Approach Slab	Back Fill	Comments
Alaska	Only for long bridges	On the basis of experience Steel: ≤ 300 ft. Concrete: ≤ 400 ft. Prestressed: ≤ 416 ft.	Hinge	—	No	Granular Material	Bridges with integral abutments may be constructed with spread footings or pilings. As longer bridges without expansion joints are found to be without problems, the length limit has increased to 400 ft. for concrete bridges.
Arizona	No	On the basis of experience Steel: ≤ 253 ft. Concrete: ≤ 330 ft. Prestressed: ≤ 404 ft.	Hinge	No	Tied to abutment with dowels & moves back & forth with superstructure	Cohesive Material	
California	Piles are driven into pre-drilled holes & stresses due to lateral movement are neglected	On the basis of experience Steel: ≤ 240 ft. Concrete: ≤ 260 ft. Prestressed: ≤ 150 ft.	Partially Restrained		—	Pervious	
Colorado	No	On the basis of experience Steel: ≤ 200 ft. Concrete: ≤ 400 ft. Prestressed: ≤ 400 ft.	Hinge	No	For bridge length > 200 ft., use approach slab	Granular	No problem in skew; use pre-drilled oversized hole.
Connecticut	No	On the basis of experience Steel: ≤ 200 ft. Concrete: ≤ — Prestressed: ≤ —	Fixed	—		—	As of May 1983, only one integral abutment has been designed & constructed. The design of this 245-ft. long two-span continuous bridge was based on information received from the South Dakota Dept. of Trans.
Georgia	No	Based on total anticipated lateral movement of ≤ 2 in. Steel: ≤ 300 ft. Concrete: ≤ 600 ft. Prestressed: ≤ —	Free translation, free rotation, roller	No	Expansion joint between approach slab & bridge slab	Roaway fill	Integral abutments have been used only at sites where steel H-piles are suitable. Steel H-piles are placed so that they bend about their weak axis.
Idaho	Only for those that involve some unique feature that would warrant such calculations	Based on FHWA guidelines & the state's experience Steel: ≤ 200 ft. Concrete: ≤ 400 ft. Prestressed: ≤ 400 ft.	Hinge	Rigid pile cap	Expansion joint specified between rigid pavement & approach slab; no special treatment specified for flexible pavement	Free draining granular material	Assume that passive earth pressure at abutments tends to restrain movement & reduce deflections from calculated values. Skewed 3-span steel girder bridge with integral abutment was built; rotational forces from lateral earth presence on end wall caused failure in pier anchor bolts on exterior girder.
Indiana	No	Steel: ≤ — Concrete: ≤ 150 ft. Prestressed: ≤ —	Hinge	Embed piles only 1 ft. into the cap	20-ft. approach slab integrally attached to bridge	Select granular fill	Only vertical piles are used with integral abutments. When bridge skew > 30°F, length limit for concrete bridges is ≤ 100 ft. Integral abutments have been used for many years with no adverse experience. On longer bridges, the integral connection is eliminated, substituting a neoprene bearing pad or

continued on next page

State	Design Consideration: Piling Stresses Due to Lateral Movement Are Calculated	Design Consideration: Criteria for Maximum Length for Bridges With Integral Abutments	Design Assumptions & Details: Pile Head	Pile Cap	Approach Slab	Back Fill	Comments
Indiana, cont.							expansion device, use alternating vertical & battered piles in the cap & still neglect lateral forces on the piles.
Iowa	Yes	Based on allowable bending stress of 55% of yield plus 30% overstress. Moment in pile found by a rigid frame analysis considering relative stiffness of the superstructure & the piling. Assume piles to be 10.5 ft. & neglect soil resistance. Analysis showed that allowable pile deflection was about 0.325 in. Steel: ≤— Concrete: ≤ 265 ft. Prestressed: ≤ 265 ft.	Fixed	Neglect	Neglect	Roadway fill	Conservative design.
Kansas	No	Based on experience Steel: ≤ 250-300 ft. Concrete: ≈ 500 ft. Prestressed: ≤— ft.	Hinge	Pile caps not used	Use slab support at backwall & pavement rests on slab with about 30 ft. from end of wearing surface	Backfill compaction has settlement just off end of bridge	Have used integral abutments for cast-in-place bridge structures for many years & have encountered no difficulties. Expect to increase length limits in the future.
Kentucky	No	Steel: ≤— Concrete: ≤ 300 ft. Prestressed: ≤ 300 ft.	Fixed or partially restrained	—	No special treatment with flexible pavement	Special granular backfill specified	Piles are placed in holes prebored for a distance of 8 ft. below bottom of pile cap.
Missouri	No	Based on experience of Missouri & other states (mainly Tennessee) Steel: ≤ 400 ft. Concrete: ≤ 400 ft. Prestressed: ≤ 500 ft.	Hinge	On extreme skews (±40°), use shear key on bottom of pile cap to prevent lateral movement of pile cap	—	Roadway fill	Require a minimum of 15 ft. pile length to permit flexure of pile.
Montana	No	Based on experience & engineering judgement Steel: ≤ 300 ft. Concrete: ≤ 350 ft. Prestressed: ≤ 300 ft.	Hinge	—	Not fixed to abutment	Granular material	≤ 30° skew
North Dakota	No	Steel: ≤ 350 ft.	Fixed	Abutment wall is pile cap & is reinforced to resist bending below superstructure	Assume approach slab has no effect	Select granular material	≤ 30° skew
Nebraska	No	Based primarily on past experience & recommendations from other agencies Steel: ≤ 200 ft. Concrete: ≤ 300 ft. Prestressed: ≤ 300 ft.	Hinge	—	—	Select granular fill	≤ 15° skew Procedures for determining piling numbers are same as for conventional abutments. Pilings are rotated to provide bending about weak axis. Presently, only steel H-piles are used in integral abutments & also substantial anchorage between girder & abutment are provided. Wings on integral abutments are not attached to the abut-

continued on next page

State	Design Consideration: Piling Stresses Due to Lateral Movement Are Calculated	Design Consideration: Criteria for Maximum Length for Bridges With Integral Abutments	Design Assumptions & Details: Pile Head	Design Assumptions & Details: Pile Cap	Design Assumptions & Details: Approach Slab	Design Assumptions & Details: Back Fill	Design Assumptions & Details: Comments
Nebraska, cont.							ment in order to reduce resistance to rotation. This is accomplished by using a bond breaker between the abutment & wing, & designing the wing as a standalone structure.
New Mexico	No	—	Partially restrained or fixed	—	Used on some bridges & not on others	Do not use specified backfill anymore	Have built bridges with up to 15° skew; skew angle neglected.
New York	No	Steel: ≤ 300 ft. Concrete: ≤ — Prestressed: ≤ 400 ft.	—	—	Approach slab should be 20 ft. long max & its end should be parallel to the skew. Construction joint provided between approach & bridge slabs	Granular fill behind backwall & wingwalls.	New York has tentative integral abutment bridge design guidelines that list the design parameters that must be satisfied.
Ohio	No	Based on experience & engineering judgement Steel: ≤ 300 ft. Concrete: ≤ 300 ft. Prestressed: ≤ 300 ft.	Hinge	Pile cast in pile cap 2 ft.	Tie approach slab to abutment	Granular material	Oil country pipelines not used in integral abutments because they are stiffer than H-piles about weak axis. Integral abutment bridges built only with zero skews.
Oklahoma		Based on allowable lateral movement of 0.5 in. Steel: ≤ 300 ft. Concrete: ≤ 300 ft. Prestressed: ≤ 300 ft.	Partially restrained	—	—	—	Integral abutments only with zero skews.
Oregon	No	Based on engineering judgement. Length varies depending on location in state. Steel: ≤ — Concrete: ≤ 350 ft. Prestressed: ≤ 350 ft.	Hinge	Pile cast in pile cap 1 ft.	Approach slab tied to pile cap	Granular	
South Dakota	Yes	—	Fixed	—	Tied to bridge to prevent erosion of shoulder	Granular	
Tennessee	No	Based on experience Steel: ≤ 400 ft. Concrete: ≤ 800 ft. Prestressed: ≤ 800 ft.	Hinge	—	Construction joint between abutment backwall & approach slab	Granular	No bridge deck expansion joints are to be provided unless absolutely necessary.
Utah	No	Steel: ≤ 300 ft. Concrete: ≤ — Prestressed: ≤ 300 ft.	Hinge	—	Expansion joint between approach & bridge slabs	Granular	Steel piles used primarily through granular material over bedrock.
Virginia	No	Steel: ≤ 242 ft. Concrete: ≤ — Prestressed: ≤ 454 ft.	Hinge or fixed	Uniform width & parallel to bridge skew	No approach slab	1.5 ft. porous backfill with 0.5 in. dia. pile underdrain	Max skew 10°; relatively small movement at each abutment (±0.75 in.).
Vermont	No	Steel: ≤ 150 ft. Concrete: ≤ — Prestressed: ≤ —	Partially restrained or fixed	Rigid pile cap	Approach slab anchored to abutment	No special treatment	≤ 30° skew

continued on next page

State	Design Consideration: Piling Stresses Due to Lateral Movement Are Calculated	Design Consideration: Criteria for Maximum Length for Bridges With Integral Abutments	Design Assumptions & Details: Pile Head	Design Assumptions & Details: Pile Cap	Design Assumptions & Details: Approach Slab	Design Assumptions & Details: Back Fill	Design Assumptions & Details: Comments
Washington	No	Mainly based on past experience Steel: ≤ — Concrete: ≤ 400 ft. Prestressed: ≤ 400 ft.	Hinge	Designed as cross beam on simple supports	Approach slab attached to abutment with allowance for expansion	Granular backfill, earth pressure applied normal to abutment	
Wisconsin	No	Steel: ≤ 200 ft. Concrete: ≤ 300 ft. Prestressed: ≤ 300 ft.	Fixed	Designed as reinforced continuous beam over pilings	Designed for vertical load only	Granular	≤ 30° skew for slabs; ≤ 15° skew for prestressed or steel girders
Wyoming	No	Based on various studies, reports, *etc.* Steel: ≤ 300 ft. Concrete: ≤ 500 ft. Prestressed: ≤ 500 ft.	Plastic hinge	Assumed to be a mass attached to end of girder	—	Granular	
FHWA, Region 15	Yes	Steel: ≤ — Concrete: ≤ 270 ft. Prestressed: ≤ 300 ft.	Hinge or partially restrained	Pile cast in pile cap 1 ft.	—	Pervious	

abutment beam can be constructed integrally. A construction joint should be provided between the abutment backwall and the approach slab. An unrestrained abutment is one that is free to rotate, such as a stub abutment on one row of piles or an abutment hinged at the footing with the axis of rotation being skewed between 60 and 90° to the direction of movement.

When the total anticipated movement at an abutment is less than 0.25 inch, the abutment may be constructed integral with the superstructure regardless of the support conditions. When the total movement is more than 0.25 inch and the abutment is restrained against movement and rotation, an expansion joint is required. When the total movement is greater than 0.25 inch, the design drawings should show the total required movement for each joint and specify three proprietary strip seals for the contractor's selection and allow alternate details to be submitted to the engineer for approval.[4]

New York. Since the approach slabs are connected to the bridge slab, the distance from the end of approach slab to end of approach slab should be considered the length for an integral abutment structure. The criteria specified by the state are:

- Length 150 feet or less: No provision for expansion is required.
- Length over 150 feet up to 300 feet: Provision should be made for expansion at the end of the approach slab. If at all possible, the span arrangement and interior bearing selection should be such that approximately equal movements will occur at each abutment.
- Length over 300 feet up to 400 feet: Lengths in this range are approved on an individual basis. Provision for expansion should be made at the end of each approach slab.
- Lengths over 400 feet: Not recommended at this time.[8]

California. Thermal movements are easily absorbed by this type of abutment. Abutments of conventionally reinforced continuous concrete bridges of over 400 feet in length have shown no evidence of distress even though the end diaphragms were supported on piles. However, movement of the abutments from shrinkage and temperature changes result in an opening at the paving notch allowing for the intrusion of water. Prestressed structures exacerbate the intrusion problems because of the ad-

ditional movement resulting from plastic shortening.[6]

Because of the problems arising from the movement at the abutments, the use of the end diaphragm abutment should be limited to the following values unless mitigating measures are used (based on movement required equal to 0.75 inch/100 feet):

- For a temperature range of 80°F: steel 240 ft., reinforced concrete 260 ft., PC concrete 240 ft. and CIP/PS 150 ft.
- For a temperature range of 100°F: steel 200 ft., reinforced concrete 210 ft., PC concrete 200 ft. and CIP/PS 130 ft.
- For a temperature range of 120°F: steel 160 ft., reinforced concrete 180 ft., PC concrete 170 ft. and CIP/PS 120 ft.

Federal Highway Administration. Thermal movements are predicted on the cold climate temperature ranges specified in the American Association of State Highway and Transportation Officials (AASHTO) bridge specifications, Article 1.2.15. State standards specifying other temperature ranges require adjustment of any of those values indicated.[7]

For structural steel supported bridges, Article 1.2.15 specifies a cold climate temperature range of 150°F with a thermal coefficient of 0.0000065, resulting in a total thermal movement of 1.25 inches (32 mm) of movement per 100 feet (30.5 m) of the structure.

For concrete superstructures, the AASHTO bridge specification specifies a cold climate temperature range of 80°F, a thermal coefficient of 0.0000060 and a shrinkage factor of 0.0002. However, this shrinkage effect can be reduced, provided the normal construction sequence allows the initial shrinkage to occur prior to the completion of the concrete operations. Based on an assumed shrinkage reduction of 50 percent, total allowance for thermal and shrinkage movement in a concrete structure would be approximately 0.75 inches (19 mm) per 100 feet (30.5 m).

For prestressed concrete structures, a somewhat smaller total movement occurs once the prestressing shortening has taken place. Movement of 0.625 inch (15.9 mm) per 100 feet (30.5 m) of structure is a reasonable value. This design criterion permits thermal movement and assumes that there would be no effect from shrinkage and long-term creep. This value has been substantiated in the field as a reasonable value for movement for normal highway overcrossing structures. In long pre- or post-tensioned concrete structures, long-term creep may occur, but this creep is normally insignificant insofar as provision for movement is concerned.

The flexibility of individual substructure units affects the distribution of the total movement between specified joints.

In cold climate conditions, the provisions for total bridge movement that are depicted in Figure 4 should be adopted. For those areas with moderate climate conditions, a 20 percent reduction of the AASHTO Article 1.2.15 values of 120°F for steel and 70°F for concrete may be used.

Approach Slab

New York. Approach slabs should be 20 feet long (maximum) and the end of the approach slab should be parallel to the skew (30° maximum skew angle). A tight joint should be placed directly over the backwall between the approach slab and bridge slab in order to provide a controlled crack location, thus preventing a random crack pattern from developing. Epoxy coated dowels should pass through the joint and be located near the bottom of the slab in order to keep the joint tight, but still allow the approach slab to settle without causing tension cracking in the top of the slab.

There has been considerable discussion and no agreement on whether the joint should be formed or saw cut. A formed joint can provide positive assurance that the joint would wind up exactly where it should be located and the approach slab would always be supported on the backwall. In many instances, the approach slab is not as wide as the bridge slab. In those instances, the joint is U-shaped and can be formed neatly and easily. The disadvantage to the formed joint is that it requires the approach slab to be poured separately from the bridge slab.

A saw cut joint allows the bridge slab and approach slab to be cast in a single operation. There is some concern as to how soon the saw cutting operation could be commenced and

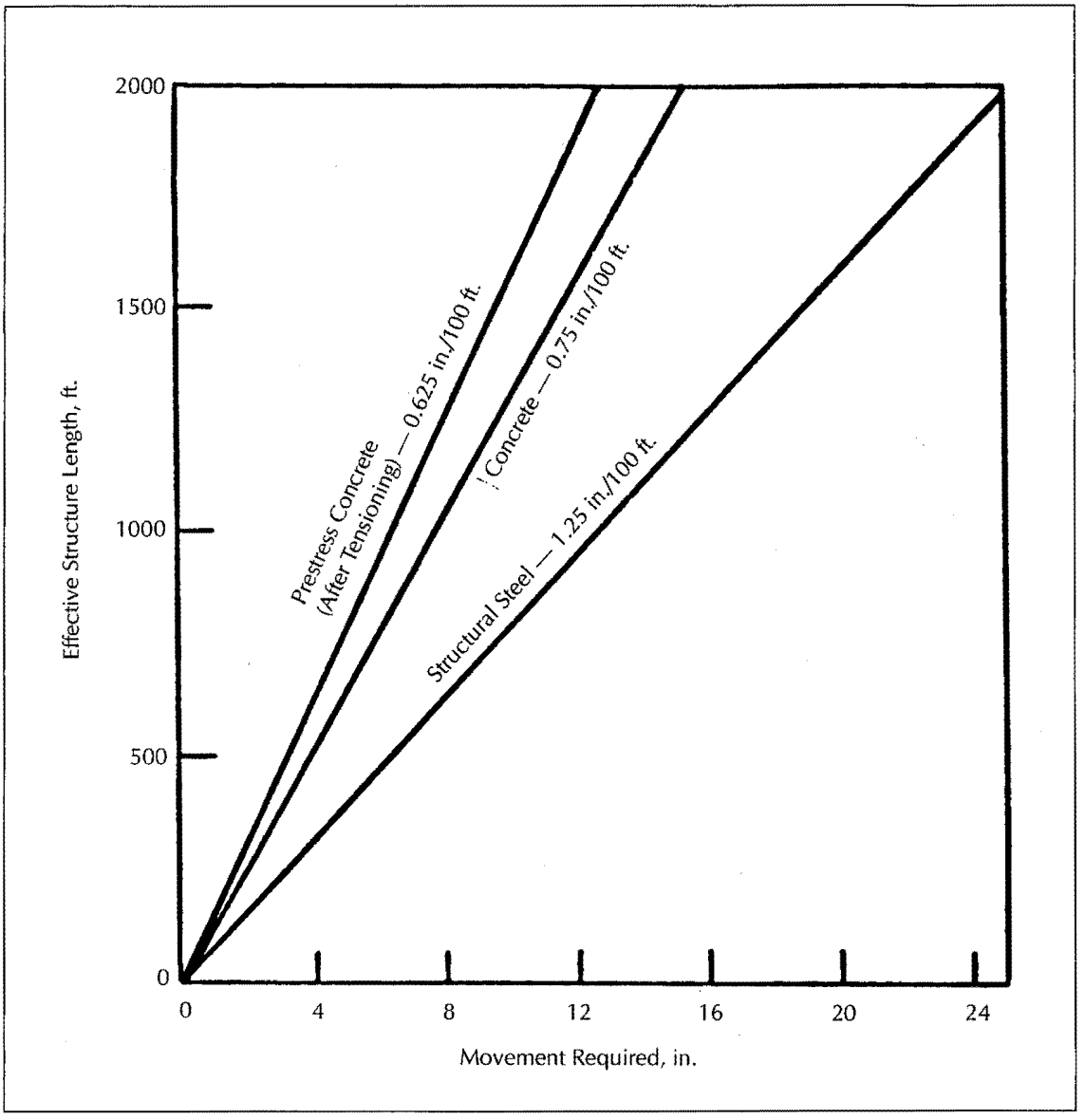

FIGURE 4. The required provision for total bridge movement under cold climate conditions.

whether cracking would occur before the saw-cutting was started. Also, the saw cut is only to a partial depth and there is no guarantee that the crack that eventually develops between the bottom of the saw cut and the bottom of the slab will be a vertical line. If it cracks on a diagonal, the bottom of the crack may fall outside of the backwall, thus jeopardizing the approach slab support.

Reliable poured, or caulk applied, sealers could be used to seal the joint. If sealers are used, the joint should be formed rather than sawed. On structures over 150 feet, an expansion joint should be placed between the end of the approach slab and another short slab approximately 15 feet long. A short sleeper slab should be placed directly beneath the expansion joint. The 15-foot slab and sleeper slab are stationary, while the end of the approach slab is free to slide back and forth on top of the sleeper slab. The expansion joint is filled with some type of compression seal or perhaps asphalt concrete.

The purpose of the expansion joint is to

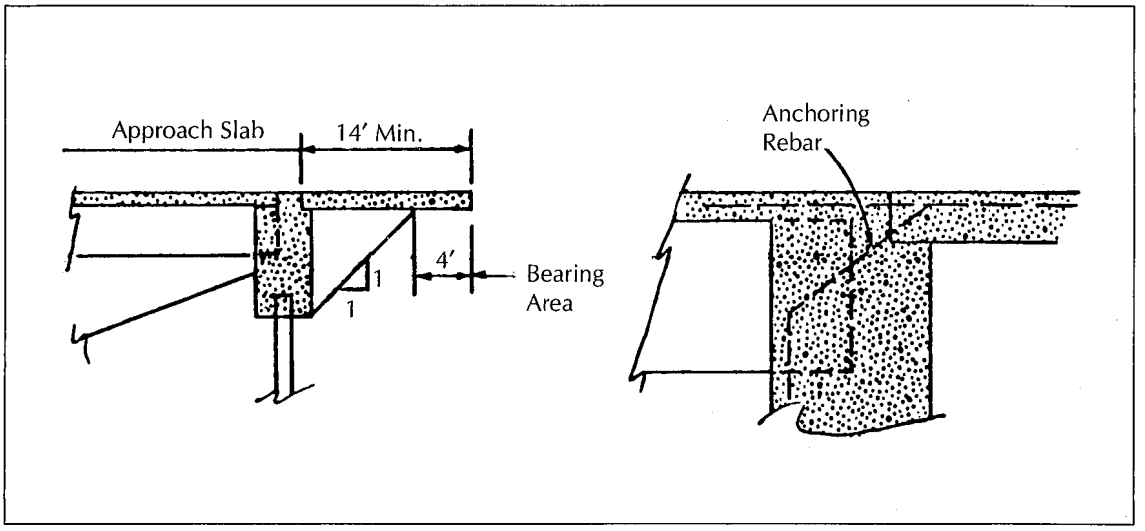

FIGURE 5. Approach slab details.

prevent a possible maintenance problem at the end of the approach slab. The joint at the end of the approach slab is a working joint. It opens and closes due to thermal expansion and contraction. The longer the span, the greater the opening and closing. Photos taken of joints at the ends of approach slabs for two different integral abutment structures that do not have any provision for expansion reveal that there is potential for future maintenance at these joints.[8]

Federal Highway Administration. Approach slabs are needed to span the area immediately behind integral abutments in order to prevent traffic compaction of material where the fill is partially disturbed by abutment movement. The approach slab should be anchored with reinforcing steel to the superstructure and have a minimum span length equal to the depth of abutment (1 to 1 slope from the bottom of the rear face of the abutment), plus a 4-foot minimum soil bearing area. A practical minimum length of slab would be 14 feet. See Figure 5 for details.[7]

The design of the approach slab should be based on *AASHTO Specifications for Highway Bridges,* Article 1.3.2(3) Case B, where design span "S" equals slab length minus 2 feet. Positive anchorage of integral abutments to the superstructure is strongly recommended. North Dakota provides a roadway expansion joint 50 feet from the end of bridge to accommodate any pavement growth or bridge movement.

Wingwall Configurations & Details

Tennessee. No. 4 bars should be used for wingwall lengths of 6 to 7 feet, No. 5 bars for wingwalls 7 to 10 feet and No. 6 bars for wingwalls 10 to 12 feet. These values may be adjusted by individual design. For wingwall lengths greater than 12 feet, the designer should use a comprehensive analysis for each case.[4]

New York. Wingwalls should be in-line or flared. U-walls are not allowed and were eliminated because of design uncertainty, backfill compaction difficulty, and the additional design and details that have to be worked out for the joint between the wingwalls and approach slab.

Wingwall lengths in excess of 10 feet should be avoided. Generally, the controlling design parameter is the horizontal bending in the wingwall at the fascia stringer caused by the large passive pressure behind the wingwalls. When the wingwalls are longer than 10 feet, areas of steel greater than No. 11 bars at 6 inches may be required. The 10-foot dimension is a projected dimension and should be measured along a line perpendicular to the fascia stringer. Thus, flared wingwalls may be longer than 10 feet, providing the projected length does not exceed 10 feet.

Stem thickness should be 2 feet minimum. Wingwalls may be tapered to less than 2 feet in

order to reduce vertical dead load.[8]

On structures that have been designed to date, the controlling design parameter has been horizontal bending in the wingwall at the fascia girder that is caused by the large passive pressure behind the abutment. Since it is not certain what the horizontal pressure will be, the state has elected to use the maximum pressures that were obtained in the testing conducted by South Dakota State University for the South Dakota Department of Highways in 1973.[9] In their testing program, they jacked against the backfill in quarter-inch increments and measured the corresponding passive pressures in the backfill material. The anticipated structure movement is then calculated and a corresponding passive pressure from their test data is selected. This pressure is placed over the entire surface area of the abutment, then the horizontal bending moment in the wingwalls caused by the passive pressure trying to bend the wingwalls about the fascia stringer can be calculated.[5]

General Design Details & Guidelines

New York. Foundation Type: All integral abutments should be supported on piles. Steel H or CIP may be used for structure lengths of 150 feet or less. Only steel H-piles should be used for structure lengths over 150 feet. All piles should be in one single line and be oriented so that bending takes place about the weak axis of the pile. When steel H-piles are used, the web of the pile should be perpendicular to the centerline of the stringer regardless of the skew.

Construction: Steel or prestressed concrete superstructures may be used. Only straight stringers are allowed. Curved superstructures are allowed, providing the stringers are straight. Curved stringers were eliminated to guard against the possibility of flange buckling caused by the stringers trying to expand between the restraining abutments. Stringers should be parallel to each other. The abutments should also be parallel to each other. The maximum vertical curve gradient between abutments should be 5 percent. Stage construction is not allowed when integral abutments are used.

California. Restraining Forces: The values listed below for resistance offered by various end conditions are applied at the base of the end diaphragm to determine the proper reinforcement. These values do not take into account the special situations where very long piles or small limber piles offer little resistance to longitudinal movement. The values are for the design longitudinal force (service level) for each abutment type:

- End diaphragm on CIDH piles — 25 kips per pile
- End diaphragm on concrete-driven piles — 20 kips per pile
- End diaphragm on 45T steel piles — 15 kips per pile
- End diaphragm on neoprene strip or pads — 15 percent of dead load
- End diaphragm on rollers — 5 percent of dead load

The values for CIDH, concrete-driven and 45T steel piles are for the design of the end diaphragm only.

Earthquake Forces: Shear keys must be provided in order to resist transverse and longitudinal earthquake forces acting on the structure. These keys should be normally placed behind and at the ends of the abutment wall on narrow structures. On wide structures, additional keys may be located in the interior. One half-inch expansion joint filler should be specified at the sides of all keys to minimize the danger of binding.

Drainage: No previous material collector or weep holes are required for flat slab bridges. Continuous pervious backfill material collector and weep holes may be used for abutments in fills or well-drained cuts and at sites where a 5-foot level berm is specified. For an unprotected berm, the weep hole discharge is directly on the unprotected berm; for full slope paving, the weep hole discharge is on the spacer or groove in the paved surface. When there is continuous permeable material and a perforated steel pipe collector discharging into corrugated steel pipe, overside drains should be used for all other abutments. Corrugated steel pipe overside drains must be coordinated with the road plans. If there is no discharge system and no collector ditch, the outfall must be located away from the

toe of slope to prevent the erosion of the end slope. Abutment drainage systems should be coordinated with the slope paving.

Backfill Placement: Unless there are special soil conditions or unusual structure geometrics, the method or timing of backfill placement need not be specified. Passive resistance of soil in front of the end diaphragm offers little restriction to structure movement due to stressing; nor will the active pressure of backfill behind the end diaphragm materially alter the stress pattern even if the fill is completed at one abutment before being started at the other.

Summary

Previous surveys concerning the use of integral abutments have indicated that most state highway departments have their own limitations and criteria in designing integral abutments.[2,3] The bases of these limitations and criteria are shown to be primarily empirical.[10,11] Twenty-eight states and the District Construction Office of FHWA Region 15 are known to use integral abutments. The current thinking and practice in integral abutment design by the state highway departments and the District Construction Office of FHWA Region 15 are summarized in Table 1. Information on general policy on integral abutment design, provision for bridge movement, approach slabs, wingwall configurations and details, and general design details and guidelines by selected state highway departments (Tennessee, New York and California) and the Federal Highway Administration has also been provided.

Iowa, South Dakota and FHWA Region 15 indicated that piling stresses due to lateral movement are calculated for integral abutment bridges. Alaska and Idaho indicated that such calculations are warranted only for integral abutment bridges that involve some unique feature. The remaining states neglected piling stresses due to lateral movement, although some states like California required some type of mitigating construction detail such as driving the piles into pre-drilled holes.

Construction details vary widely from state to state. Pile head fixity conditions may be of the hinge, fixed or partially restrained type. Pile caps may, or may not, be used. Approach slabs are, in some states, tied to the abutment with dowels and move back and forth with the superstructure, while other states claim that the expansion joint between the approach slab and bridge slab is needed to prevent possible maintenance problems.

While granular material is the most widely used backfill material, some states like New Mexico no longer use specified backfill. Wingwalls may be in-line or flared. Some states like New York do not allow U-walls. U-walls are disallowed because of design uncertainty, backfill compaction difficulty and the additional design and details that have to be worked out for the joint between the wingwalls and approach slab. New York recommends avoiding wingwall lengths in excess of ten feet.

Generally, the controlling design parameter is the horizontal bending in the wingwall at the fascia stringer caused by the large passive pressure behind the wingwalls. When the wingwalls are longer than ten feet, areas of steel greater than No. 11 bars at six inches may be required. The ten-foot dimension is a projected dimension and should be measured along a line perpendicular to the fascia stringer. Thus, flared wingwalls may be longer than ten feet, providing the projected length does not exceed ten feet. Tennessee recommends the use of No. 6 bars for wingwalls between ten and twelve feet, and requires the designer to use a comprehensive analysis if wingwall lengths greater than twelve feet are to be used.

The maximum allowable lengths for bridges with integral abutments used by the different states are summarized in Table 1. The length limitations were set for the most part on the basis of experience and engineering judgment. Many of the states have been progressively increasing the length limitations over the past thirty years primarily as a result of observing the satisfactory performance of actual installations. As of 1983, the length limitations for non-skewed integral abutment bridges had the following range:

- steel — 150 to 400 feet;
- concrete — 150 to 800 feet; and,
- prestressed concrete — 200 to 800 feet.

Most states use the same length limitations for skewed integral abutment bridges.

AMDE M. WOLDE-TINSAE *is currently Professor of structural engineering at the University of Maryland, College Park. He earned his B.S. in mechanics from Johns Hopkins and his M.S. and Ph.D. in structural engineering from the University of California at Berkeley and State University of New York at Buffalo. His teaching career has included positions at McMaster University in Canada and Iowa State University.*

LOWELL F. GREIMANN *received his structural engineering Ph.D. degree from the University of Colorado, Boulder, in 1968. He is currently a Professor at Iowa State University and is involved in research in the finite element and maintenance management areas.*

REFERENCES

1. Baboian, R., "Corrosion — A National Problem," *Standardization News*, American Society for Testing and Materials, Philadelphia, March, 1986.

2. Greimann, L.F., Wolde-Tinsae, A.M., and Yang, P.S., "Skewed Bridges with Integral Abutments," *Bridges and Culverts*, Transportation Research Record 903, Transportation Research Board, National Academy of Sciences, 1983.

3. Wolde-Tinsae, A.M., Greimann, L.F., and Johnson, B.V., "Performance of Integral Bridge Abutments," *Journal of the International Association for Bridge and Structural Engineering*, IABSE Proceedings P-58/83, February 1983, pp. 17-34.

4. *Tennessee Structures Memorandum — 045*, State of Tennessee, SM045-01/07, February 1982.

5. Hourigan, E.V., Deputy Chief Engineer (Structures), New York State Department of Transportation, 1220 Washington Avenue, State Campus, Albany, New York, correspondence, April 1983.

6. Hood, G.A., and Mancarti, G.D., "Memo to Designers," Department of Transportation, Sacramento, California, February 1983.

7. *Integral, No-Joint Structures and Required Provisions for Movement*, U.S. Department of Transportation, Federal Highway Administration, T5140.13, January 28, 1980.

8. *Tentative Integral Abutment Guidelines*, New York State Department of Transportation, 1220 Washington Avenue, State Campus, Albany, New York.

9. Lee, H.W., and Sarsam, M.B., "Analysis of Integral Abutment Bridges," South Dakota Department of Transportation, March 1973.

10. Yang, P.S., Wolde-Tinsae, A.M., and Greimann, L.F., "Effects of Predrilling and Layered Soils on Piles," *Journal of Geotechnical Engineering*, ASCE, Vol. 111, No. 1, January, 1985.

11. Greimann, L.F., Yang, P.S., and Wolde-Tinsae, A.M., "Nonlinear Analysis of Integral Abutment Bridges," *Journal of Structural Engineering*, ASCE, Vol. 112, No. 10, October, 1986.