A Comparative Experimental Study of Reinforced Lightweight Concrete Roof Slabs

Reinforced lightweight concrete one-way slabs made using perlite, styropor and pumice lightweight aggregates and aerated concrete slabs can behave favorably in terms of load-carrying capacities, deflections, initial crack loads and crack widths.

MURAT GÜROL, MEHMET A. TASDEMIR & FERRUH KOCATASKIN

PUMICE, VOLCANIC TUFF and volcanic cinders are the most abundant natural lightweight aggregates in Turkey, where pumice reserves in the regions of Sarikamis, Agri, Van, Bitlis, Kayseri and Nevsehir are estimated to be 15 billion cubic meters. Also, there are approximately eight billion tons of perlite reserves in Turkey.[1,2] Generally, artificial lightweight aggregates are used for structural lightweight concrete, but artificial ones are not yet available in Turkey and other parts of the world. However, before an artificial lightweight aggregate industry is developed in these areas, these abundant natural lightweight aggregate reserves should be considered for possible utilization. Natural lightweight aggregates do have lower strengths and endurance compared with artificial ones. In spite of this fact, if necessary precautions against moisture effects are taken, it is possible to produce reinforced concrete structural elements such as roof slabs and wall panels of moderate strength and of low thermal conductivity using natural lightweight aggregates.[3,4] The use of lightweight reinforced concrete in the earthquake-prone areas of Turkey, for example, can also be beneficial in reducing the lateral forces and moments caused by earthquakes.

Experimental Study

The main objective of the study was to find out how roof slabs produced using natural pumice aggregates compared to slabs of other types of lightweight concretes. Nine reinforced

Table 1
The Densities of Pumice Aggregates

Size Fractions (mm/mm)	Specific Gravity Oven Dry	Specific Gravity Saturated	Bulk Density (Oven Dry) kg/m^3
2/4	0.80	1.04	410
4/8	0.78	1.00	400
8/16	0.74	0.93	380

lightweight concrete one-way slabs fabricated using perlite, styropor and pumice lightweight aggregates and three aerated concrete slabs were tested in flexure under short-term four-point loading until failure. For comparative purposes, unit weights (800 kg/m^3), dimensions and reinforcing of all slabs were kept equal to the aerated concrete ones. In addition, three cylindrical samples were cast from each slab mix for uniaxial compression testing.

The midspan deflections and extreme fiber strains of the slabs were measured during the flexure tests. Compression and deformation tests were also performed on the cylinders.

Materials

The natural sand used in perlite and styropor slabs possessed a continuous grading 0 to 4 mm with a specific gravity of 2.66 and a bulk unit weight of 1.54 kg/dm^3. Moisture absorption of the sand was 2 percent.

Pumice lightweight aggregate brought from the Kayseri-Develi district had a size range of 2 to 16 mm. In order to obtain a homogeneous lightweight aggregate, only particles that floated on water were used in the casting of the concrete. Some of the properties of these floating fractions are given in Table 1. The water absorption of the pumice aggregate after 30 minutes was 18 percent with respect to its dry weight and 30 percent after 24 hours. The chemical composition of the pumice aggregate was 84.3 percent insoluble SiO_2 and 6 percent soluble SiO_2 with small amounts of Al_2O_3, Fe_2O_3, CaO and MgO.

The perlite used in the experiments was in the size range of 0 to 3 mm with a specific gravity of 0.450 and a bulk density of 0.435 kg/dm^3. The water absorption of the perlite lightweight aggregate was 174 percent with respect to its dry weight after 24 hours.

The styropor was a mixture of three size fractions 1 to 2, 2 to 4 and 4 to 8 mm. Their specific gravities were 0.034, 0.027 and 0.016, respectively. The water absorption of styropor was zero.

The cement used was a Type I cement.

The reinforcing bars used in the slabs were cold-drawn plain bars of 4.25 mm diameter. Their yield strength, *Fy*, was 610 N/mm^2; ultimate strength was 670 N/mm^2; and total elongation was 8 percent.

Mix Design

The absolute volumes method was used in calculating the mix proportions. An air entraining agent (Tricosal LP) was used in the pumice concretes in order to reduce the unit weight of the concrete to approximately 800 kg/m^3.

Mixes were prepared in a small laboratory mixer with vertical rotation axis by forced mixing. A 30-minute period of water absorption was allowed before mixing the lightweight aggregate. This absorption period prevented difficulties in workability and placing from occurring. Duration of the mixing was 2 minutes. Vibration was used for short durations while the fresh concrete was poured into the molds. Together with every slab, three test cylinders were cast from the same mix. The molds were taken off after 2 to 3 days. The concrete was moist-cured for 7 days under polyethylene sheets and wet burlap. Afterwards, they were cured in air for 56 days in a room of 65 percent (±5 percent) relative humidity and 20°C (±3°C) temperature.

The mixes and production costs for a typical plant are given in Table 2 with 1987 prices. The factory production costs of aerated slabs are known to be $64/$m^3$.

Table 2
The Mix Design & Production Costs of the Concretes Produced

Type of Concrete	Cement Content (kg)	Total Water (dm^3)	Sand (kg)	Air-Entraining Admixture (kg)	Total Weight of the Aggregate (kg)	Fresh Unit Weight (kg/m^3)	Total Water/Cement Ratio	Total Cost of Material ($\$/m^3$)
Perlite	346	400	66	—	107.0	1019	1.44	65
Styropor	402	182	324	—	17.7	926	0.45	104
Pumice	315	213	—	1.58	389.0	919	0.68	40

Reinforcement of the Slabs

The reinforcement used in the slabs consisted of 4.25 mm diameter plain, hard steel bars with welded cross-bars of the same steel as shown in Figure 1. The reinforcement of the slabs consisted of four 4.25 mm diameter bars at the bottom for tension, A_s, and two 4.25 mm diameter bars at the top for compression, $\acute{A}_s$, or utilized for constrictive reinforcement.

Flexural Tests of the Slabs

Flexural tests were performed on the slabs after the 56-day aging period using quarter-point

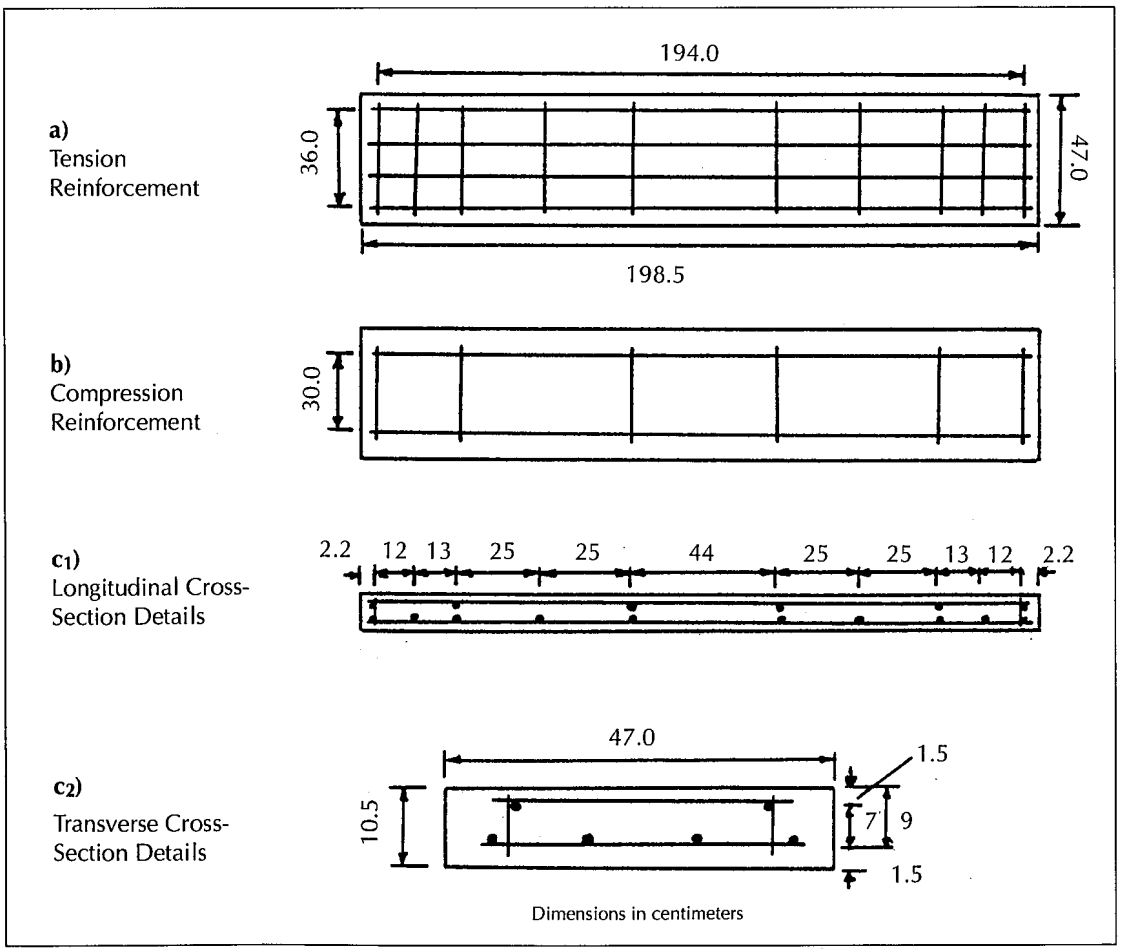

FIGURE 1. Reinforcing details of the doubly reinforced slab.

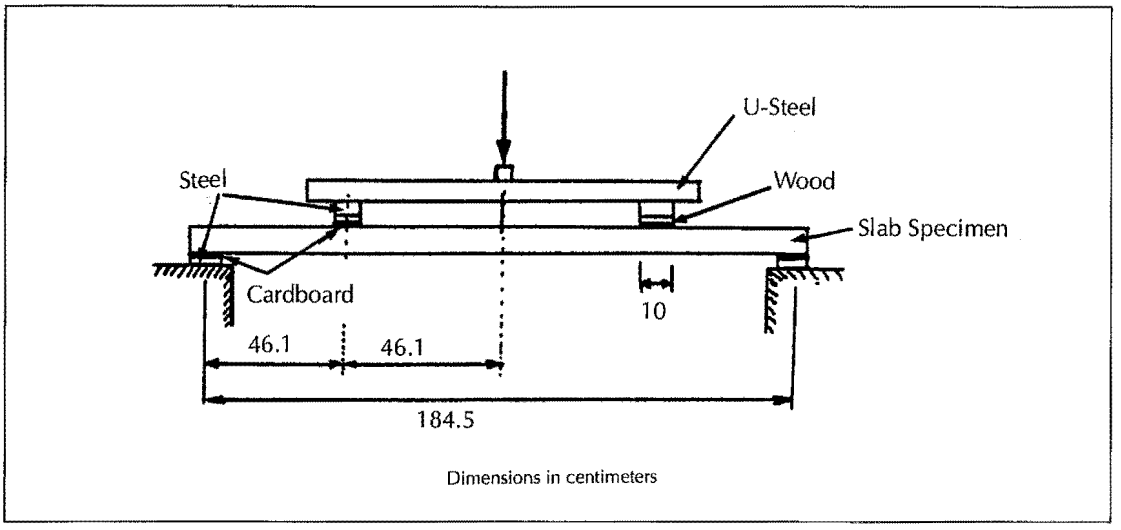

FIGURE 2. Set-up for the flexural tests of the slabs.

loading as shown in Figure 2 according to the Turkish Standard No. 453.[5] At each loading increment, crack lengths were marked on the slab and crack widths were read with a feeler gage that provided 0.05 mm accuracy. At the end of every loading period, deflections for the center and quarter points of the slabs were read with dial gages having 0.01 mm accuracy. For each loading, longitudinal strains were read at five locations along the height of the slabs using Demec points on the side surface of the concrete at the center of the span over a 200-mm gage length. Each division of the scale on the dial corresponded to a strain level of 8×10^{-6}.

Also, short-term compression tests were performed on 15 × 30 cm cylinder specimens taken from perlite, styropor and pumice concretes at the end of the 56-day aging period. The modulus of elasticity of the concrete was obtained from the slope of the stress-strain diagram by linear correlation up to the level of 1/3 times the compressive strength. In order to obtain the modulus of elasticity and compressive strength of aerated concrete, prismatic specimens of 100 × 100 × 200 mm were prepared. The loading duration for the flexural tests of the slabs was taken as about 35 minutes.

Ultimate Strength Design for Flexure

As shown in Figure 3, the design of the slab

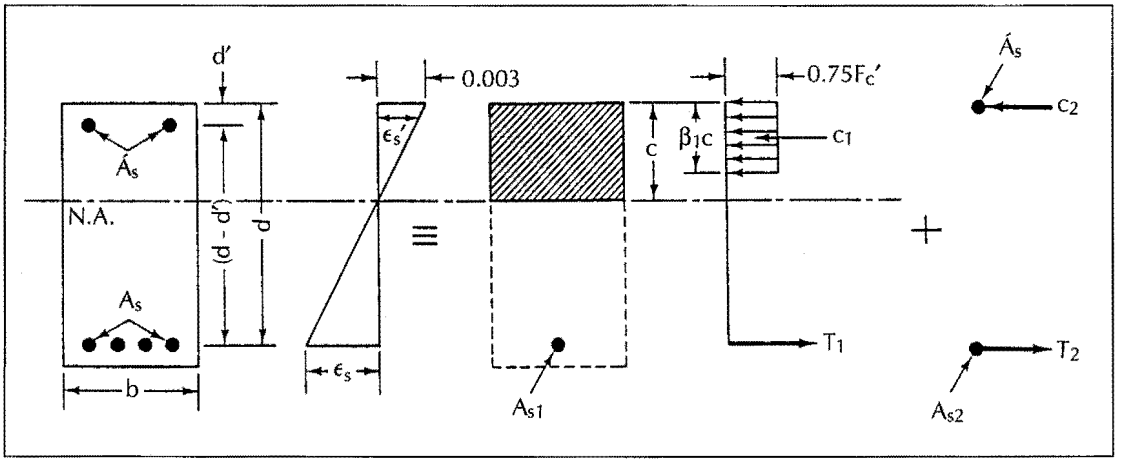

FIGURE 3. Design of reinforced lightweight concrete beam with compression reinforcements.

Table 3
Results of the Cylinder Tests at 56 Days

Type of Concrete	Modulus of Elasticity, E_c, (N/mm^2)	Compressive Strength, F_c', (N/mm^2)	Unit Weight at the Age of 56 Days (Air-Dry) (kg/m^3)	Unit Weight (Oven-Dry) (kg/m^3)	Average Moisture Content (%)
Perlite	2180	2.45	780	660	18.2
Styropor	2060	2.25	850	810	4.9
Pumice	3530	4.60	820	755	8.6
Aerated	2400	4.00	740	705	4.0

with compression reinforcement consists of two parts: the total resisting moment, M, is equal to $M_1 + M_2$.[6] If $T_1 = A_{s1}Fy$ and $A_{s1} = A_s - \acute{A}_s$, then the nominal resisting moment, M_1, becomes $(A_s - \acute{A}_s)Fy(d - a/2)$ for part 1, where $a = A_{s1}Fy/0.75F_c'b = (A_s - \acute{A}_s)Fy/0.75\,F_c'b$ in the case of lightweight concrete.[2] If the area of the concrete stress-block is smaller than normal concrete, calculations similar to those used for normal concrete slabs can be applied. The moment for part 2 is $A_{s2}Fy(d - d') = \acute{A}_sFy(d - d')$, where $\acute{A}_s = A_{s2} = A_s - A_{s1}$, and $A_{s2}Fy = C_2 = T_2$. Hence, the total resisting moment can be written as:[6]

$$M = (A_s - \acute{A}_s)Fy(d - (a/2)) + \acute{A}_sFy(d - d') \qquad (1)$$

Since Equation 1 is valid only as $\acute{A}_s$ yields, the strain compatibility check was also performed. Theoretical ultimate moments and ultimate loads for the slabs can be predicted from the above equation taking $\epsilon_u = 0.003$, $E_s = 210$ kN/mm^2, $A_s = 56.8$ mm^2, $\acute{A}_s = 28.4$ mm^2, yield strength of the steel, $Fy = 610$ N/mm^2, $d - d' = 72$ mm, and F_c' values from Table 3. On the other hand, the ultimate strength design of aerated one-way structural roof slabs was performed according to the rules given in the West German Standards (DIN 4223).[7] In these calculations, the selfweight of the slabs was considered also to behave as concentrated forces acting at the quarter points for convenience. The theoretical ultimate loads and the averages of actual test results for each type of slab are given in the last two columns of Table 4.

Results & Failure Modes

The results of the cylinder tests are shown in Table 3. All test results are average values of three tests performed for each type of concrete. With regard to the results of the flexure tests of the slabs, the average characteristic loads and unit weights for each type of slab are shown in Table 4. Dimensions of the slabs were 100 × 470 × 1,985 mm. Maximum permissible crack width was taken as 0.41 mm.[8,9]

All slabs, except for the perlite ones, lost their carrying capacities through flexural failure. One of the main differences between

Table 4
Results of Flexural Tests of the Slabs

Slab Type	Average Weight of the Slab (kg)	Average Unit Weight of the Slab (kg)	Initial Crack Load (kN)	Average Load for 0.41 mm Crack Width (kN)	Average Load of Failure (kN)	Predicted Theoretical Ultimate Load (kN)
Perlite	76.0	815	2.10	2.30	7.85	11.50
Styropor	82.1	880	2.70	5.50	11.00	11.70
Aerated	70.5	755	4.25	6.45	9.60	9.50
Pumice	79.3	850	2.50	5.45	14.00	12.50

Table 5
The Safety Factors Against Failure & First Crack Loads

Slab Type	Average Safety Factor Against Failure	Average Safety Factor Against First Crack Load
Perlite	3.60	1.29
Styropor	4.81	1.50
Aerated	4.51	2.22
Pumice	6.03	1.36

the types of failure of the aerated concrete slabs and the others was that while the failure cross-section was near the mid-span for the aerated concrete slabs, in all others it took place under one of the applied loads at the quarter points. This failure mode was due to the higher rigidity of the aerated slabs as compared to the others. Generally, two major cracks developed under both loads; one of them grew excessively for higher loads and caused first tensile and then compressive failure, or shear failure (as for the perlite slabs).

All perlite slabs lost their carrying capacities by diagonal shear. Once shear cracking had occurred, the slab was a simple arch or a strut and tie system and the principal cause of failure was the destruction of the anchorage of the tie. Use of inclined stirrups in these critical sections can be expected to increase the load-carrying capacities for these slabs considerably.[10]

For the styropor slabs, flexural cracks were formed in the regions of the shear span but not far enough out to develop into serious shear cracks. The failures were flexural with yielding of the steel and subsequent crushing of the concrete in the compression zone.

For the aerated slabs, the situation was just the opposite. Since there was practically no bond between the steel and concrete because of the bituminous coating on the steel, the cracks were sudden and deep, indicating that they were almost purely flexural. If deformed bar reinforcement is used, the results may differ.

All the pumice slabs reached their ultimate strengths by the yielding of the steel followed by the crushing of the concrete in the compression zone. Their failures were also ductile, like those of the styropor slabs, making excessive deflections before one of the main steels broke off. After this, they still had a carrying capacity for slightly higher loads. Among the four types of slabs, they had the highest load carrying capacity.

Service Loads, Deflections & Crack Widths

For a standard roof slab, the permissible load is 120 kg/m^2 in the case of snow and wind loads. For the protective layer, the permissible load is 45 kg/m^2. According to manufacturers' recommendations, minimum permissible ratios of span, L, to deflection, Δ, is 300 under these loads.

For structural reinforced elements made with pumice lightweight concrete, the safety factor against failure given in Turkish Standards 2823 is:[11]

$$n = (P_F + R + W)/(P_N + W) \qquad (2)$$

where:

P_F = failure load

P_N = nominal load

R = additional load caused by loading system, and

W = self-weight of element[5,11]

In Turkish standards, the safety factor against failure is 2.3. On the other hand, the safety factor against first crack load is 1.25, which was suggested by aerated concrete manufacturers.[5] The safety factor against failure was calculated using Equation 2. In the calculation of the safety factor against the first crack load, the same equation was used (in this case P_F was taken as first crack load). The results obtained are given in Table 5. As shown in that table, all slabs are safe against failure load and the first crack load.

Table 6
Loads for the Deflection of 6 mm & the Deflections of Slabs Under Service Loads

Slab Type	Average Load for the Deflection of 6 mm (N)	Deflection Under Service Loads (mm)
Perlite	2796	2.50
Styropor	3532	2.13
Aerated	4169	1.75
Pumice	3335	1.33

The safest one against failure load is the pumice slab; however, the safest one against first crack load is the aerated concrete slab.

If the value of $L/300$ is considered, the maximum deflection, Δ_{max}, becomes $L/300 = 1{,}845/300 = 6.15\ mm$. Loads corresponding to this value were taken from the load-deflection curves, the additional load, 245 N, caused by loading system was added to this load; however, the slab's self-load was not added. The average value of loads against the permissible deflection of 6 mm and the deflections under service loads are shown in Table 6. As shown in this table, all slabs have smaller deflections than the permissible deflections under service loads. Among these, the slab made with pumice lightweight aggregate deflected least. If loads corresponding to the deflection of 6 mm are considered, the aerated concrete slab has the highest value of load. At lighter loads, aerated concrete slabs deflect less.

Capillary & Water Absorption

Capillary and water absorption tests were carried out on all concrete specimens that were used in the slabs. The capillary coefficient, k, was obtained by using the following expression:

$$(Q/A)^2 = kt \qquad (3)$$

where:

Q = the amount of water absorbed by capillarity (cm^3)

A = the cross-section of specimen that was contacted by water (cm^2)

t = time (in seconds)

k = the capillarity coefficient of the specimen (cm^2/sec)

Water absorption experiments were performed on the $10 \times 10 \times 10$ cm cube specimens and the capillarity tests were performed on the $10 \times 10 \times 5$ cm prism specimens.

As seen in Table 7, the water absorption of perlite concrete was found to be 127 percent and of aerated concrete to be 122 percent higher, while that of styropor was 21 percent lower than the water absorption of pumice concrete. The capillarity coefficients of perlite, styropor and aerated concretes were 60, 2 and 10 times higher than those found for pumice concrete, respectively. Pumice and styropor concretes exhibit lower water absorption and lower capillarity. Pumice concrete has the

Table 7
Water Absorptions & Capillarity Coefficients of the Concrete Specimens Used in the Slabs

Type of Concrete	Water Absorption (%)	Capillarity Coefficient (cm^2/sec)
Perlite	62.0	60×10^{-5}
Styropor	21.6	2×10^{-5}
Aerated	60.6	10×10^{-5}
Pumice	27.3	1×10^{-5}

lowest capillarity coefficient among the four types, probably due to the air entraining agent used in its production which forms microscopic air bubbles in the concrete.

Conclusions

The results obtained in this study can be summarized as follows:

1. All four types of slabs furnished acceptable results in terms of accepted load-carrying capacities, deflections, initial crack loads and crack widths in the standards.
2. The failure types for the styropor and pumice slabs were highly ductile, while the aerated and perlite slabs failed in a more brittle manner.
3. All slabs except perlite failed due to flexure. Use of inclined stirrups is also expected to increase the load carrying capacities for perlite slabs. Perlite failed through diagonal shear.
4. Of the four types of slabs, the ones with pumice exhibited the highest load-carrying capacities, together with the lowest cost of production and capillary absorption, therefore being the most advantageous. Utilization of pumice lightweight aggregates can be recommended for structural as well as nonstructural lightweight concrete elements in Turkey and other earthquake-prone regions where these materials are in abundance.

The test results showed that all the slabs behaved favorably in terms of load-carrying capacities, deflections, initial crack loads and crack widths with respect to the accepted standards. The slabs made with pumice lightweight aggregate had the highest carrying capacity. Since the locally available natural pumice aggregate is abundant in Central and East Asia Minor, it is concluded that a lightweight, insulating, and economical roofing slab can be obtained by utilizing it.

MURAT GÜROL *received a B.S. in civil engineering from the Istanbul Technichal University and an M.S. in structural engineering from Bogazici University, Istanbul, Turkey. He is an engineer at a state company in Istanbul.*

MEHMET A. TASDEMIR *is an Assistant Professor of civil engineering at Istanbul Technical University where he received M.S. and Ph.D. degrees. He was a visiting scholar at Northwestern University from 1986 to 1988.*

FERRUH KOCATASKIN *is Professor of Building Materials at Istanbul Technical University. He received his Ph.D. from the Technische Hochscule in West Germany. He has studied in Canada and the U.S., and taught at Cornell from 1962 to 1963.*

REFERENCES

1. Alpan, S., "Review of the Present Scene," The First National Perlite Congress, December 20-22, 1977, Ankara (in Turkish).

2. Gürol, M., and Tasdemir, M.A., "An Experimental Study on Reinforced Lightweight Concrete Roof Decks," Northeast Region of Anatolia — First National Symposium on Earthquake, May 16-19, 1984, Atatürk Univ., Erzurum, pp. 165-182 (in Turkish).

3. Tasdemir, M.A., "Elastic and Inelastic Behavior of Lightweight Concrete Made With Pumice Aggregate Substitution," Doctoral Dissertation, Faculty of Civil Engineering, Istanbul Technical University, 1982.

4. Tasdemir, M.A., Oktar, O.N., and Özkul, M.H., "Short Term Uniaxial Compressive Behavior of Structural Lightweight Concrete Made with Pumice Aggregate Substitution," Proc. of the 2nd International Conf. on Concrete Technology for Developing Countries, October 27-30, 1986, Tripoli, pp. 714-727.

5. Turkish Standard 453-1977, *Aerated Concrete: Plain and Reinforced Concrete*, Turkish Standard Institute (TSE), 1977, Ankara (in Turkish).

6. Nawy, E.G., *Reinforced Concrete: A Fundamental Approach*, Prentice-Hall, Englewood Cliffs, New Jersey, 1985.

7. Reichel, W., *Ytong-Handbuch*, Bauverlag Gmbh, Berlin, 1974.

8. Nawy, E.G., "Crack Control in Reinforced Concrete Structures," *ACI Journal*, Vol. 65, No. 10, October 1968, pp. 825-836.

9. ACI Committee 224, "Control of Cracking in Concrete Structures," *ACI Journal*, Vol. 77, October 1980, pp. 35-76; also Vol. 69, 1972, pp. 717-753.

10. Regan, P.E., "Shear in Reinforced Aerated Concrete," *The International Journal of Lightweight Concrete*, Vol. 1, No. 2, 1979.

11. Turkish Standard 2823-1977, *Pumice Structural Lightweight Concrete Elements*, Turkish Standard Institute (TSE), 1977, Ankara (in Turkish).