Plastic Design
Steel

JOURNAL of the

BOSTON SOCIETY OF CIVIL ENGINEERS

1848
BOSTON SOCIETY OF CIVIL ENGINEERS

110 YEARS
1848-1958

JULY - 1958

VOLUME 45 NUMBER 3

BOSTON SOCIETY OF CIVIL ENGINEERS

OFFICERS, 1958-1959

PRESIDENT
WILLIAM L. HYLAND

VICE PRESIDENT
EDWARD C. KEANE
(Term expires March, 1960)

SECRETARY
ROBERT W. MOIR

TREASURER
CHARLES O. BAIRD, JR.

DIRECTORS

ARTHUR T. IPPEN
KENNETH F. KNOWLTON
(Term expires March, 1959)

JOSEPH C. LAWLER
CAS J. KRAY
(Term expires March, 1960)

PAST PRESIDENTS

EDWIN B. COBB
JOHN G. W. THOMAS
ARTHUR CASAGRANDE

SANITARY SECTION

CLAIR N. SAWYER, Chairman
GEORGE M. REECE, Clerk

STRUCTURAL SECTION

RICHARD W. ALBRECHT, Chairman
PAUL S. CRANDALL, Clerk

TRANSPORTATION SECTION

LEO F. DeMARSH, Chairman
ROBERT A. SNOWBER, Clerk

HYDRAULICS SECTION

JAMES W. DAILY, Chairman
JOHN B. McALEER, Clerk

SURVEYING & MAPPING SECTION

GEORGE A. McKENNA, Chairman
CHARLES L. MILLER, Clerk

CONSTRUCTION SECTION

WILLIAM F. DUFFY, Chairman
FRANK J. HEGER, Clerk

Editor—CHARLES E. KNOX

20 Pemberton Square, Room 601, Boston 8, Massachusetts

JOURNAL OF THE

BOSTON SOCIETY OF CIVIL ENGINEERS

Volume 45 JULY, 1958 Number 3

PAPERS AND DISCUSSIONS

OF GENERAL INTEREST

Journal of Boston Society of Civil Engineers is indexed regularly by Engineering Index, Inc.

Second-Class mail privileges authorized at Boston, Mass.

Published four times a year, January, April, July and October, by the Society
20 Pemberton Square, Boston, Massachusetts

Subscription Price $5.00 a Year (4 Copies)
$1.25 a Copy

JOURNAL OF THE

BOSTON SOCIETY OF CIVIL ENGINEERS

Volume 45 JULY, 1958 Number 3

PLASTIC DESIGN IN STEEL — A PROGRESS REPORT

By T. R. Higgins

(Presented at a meeting of the Structural Section, B.S.C.E., held on November 13, 1957.)

Plastic design, as the term will be used in this discussion, is concerned with the bending strength of members stressed primarily in flexure, when these members are components of continuous beams and rigid frames. The key to the difference between this and usual discussions of indeterminate structures lies in the use of the words "bending strength" in lieu of the more common expression "bending stress", which through long and careless usage has come to be accepted erroneously as synonymous with strength.

That stress may not always be used as an index of strength becomes evident when we consider the behavior of a structural steel beam loaded in bending to its ultimate capacity.

Because, in addition to its elastic properties, ordinary structural steel possesses ductility to a very marked degree, the true bending resistance of a steel beam can be estimated accurately only if the effect of this latter property is included in the calculations. Tests have shown that, when loaded in tension or compression so as to produce yield point stress σ_y, structural steel will, with no increase or decrease in the applied load, respectively, elongate or compress 10 to 15 times as much as it did in reaching yield point stress.

This behavior is shown in the partial stress-strain diagram at the top of Fig. 1.

Since the extreme fibres of a steel beam can elongate or compress so many times the strain corresponding to the limit of elastic strain, no appreciable error is incurred in assuming that all of the cross-section of an I-beam can be stressed to yield point. Therefore, the beam can be said to have a "plastic moment" of resistance:

$$M_p = \sigma_y Z$$

where Z is the statical moment of the beam profile area, above and below the neutral axis taken with respect to that axis. This plastic modulus Z corresponds to the section modulus S by which the elastic bending resistance of the same profile may be computed for any given maximum bending stress in the extreme fibres no greater than σ_y.

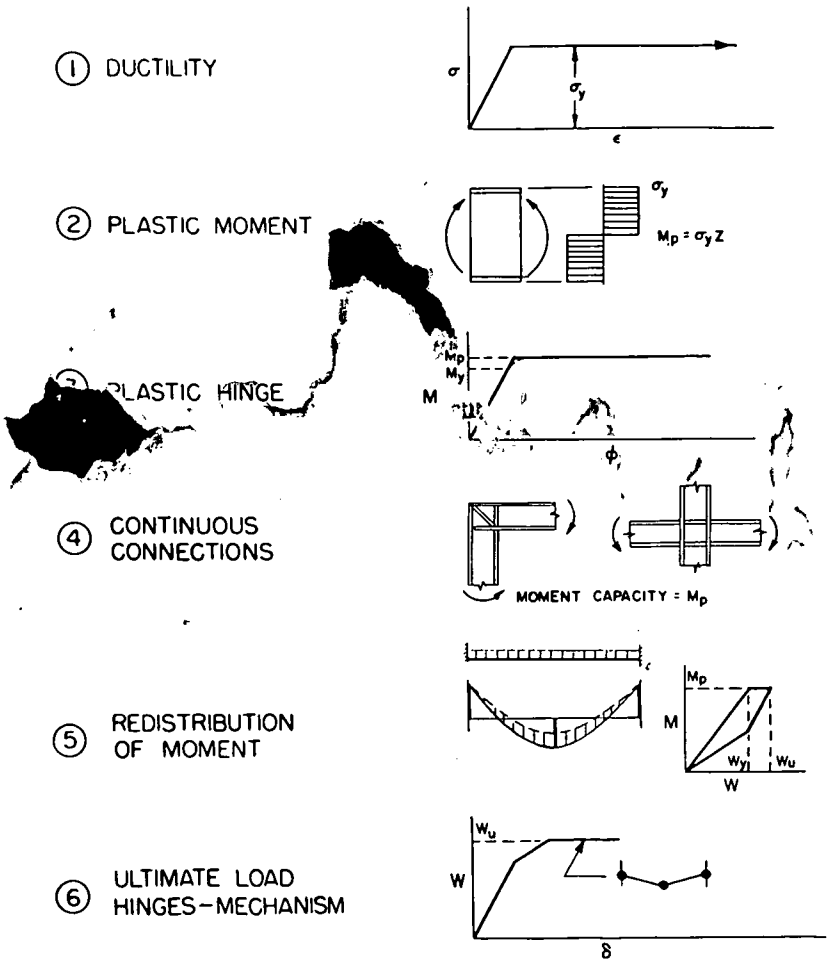

Assumptions of Plastic Analysis

FIG. 1.

When yielding has penetrated nearly to the neutral axis the total strain produced in those portions of the profile most remote from the neutral axis is no more than two to three times that associated with initial yielding. Hence, the beam possesses a reserve of rotation capacity more than sufficient to permit the yielded cross-section to function as a "plastic hinge" having the constant moment capacity M_p. This aspect of plastic bending is shown in Fig. 1, where the applied moment M is plotted against the corresponding hinge rotation φ. The ratio of plastic moment to the moment at initial yielding, M_p/M_y, generally referred to as the "shape factor", will vary with the geometry of the beam profile. For hot-rolled shapes it ranges from a low of 1.09 to a high of 1.20, with a mean value of 1.12.

With such a small difference between elastic and plastic bending resistance, the advantage in plastic design rests upon the redistribution of moment, through hinge formation at or below the level of overload at which the strength of our structure as a whole will have been reached. Such redistribution requires that the structure be continuous over one or more supports and that connections be as strong as the weaker connected part or, lacking this, that a quantitative evaluation of their moment rotation characteristics be available.

The importance of moment redistribution can be seen by considering the uniformly fixed-end beam shown in Fig. 1. Plotting corresponding moment against applied load W, separate curves are shown for the moments at the ends of the beam and at midspan. As the load is increased to the value W_y, at which yielding takes place at the fixed-ends, the corresponding moment at these points increase linearly to the plastic value M_p. At this load level the additional loading must be resisted by the unusual moment capacity at midspan, the beam functioning as if on simple supports in carrying the additional load $W_u - W_y$. Hence, the moment curve rises at a steeper slope when W is greater than W_y. During this load increase the moment at the supports remains constant at the value M_p until, at the ultimate load value W_u, the moment at midspan also is equal to M_p.

When this loading has been reached, and not before this point, the strength of the beam is fully utilized. The formation of hinges at all points of plastic bending has reduced the beam to a mechanism; the midspan deflection δ, which has been increasing at controlled rates, is no longer inhibited, just as it would be uninhibited when a single, midspan hinge forms in a simple beam when

$$W_u \cong 1.12W_y$$

In the case of the beam with fixed ends

$$M_p = \frac{W_u L}{16} = 1.12M_y$$

But

$$M_y = \frac{W_y L}{12}$$

$$\therefore \quad W_u = 1.49\ W_y$$

It is of interest to note that portions of the basic theory briefly outlined above had been published even before the turn of this century. The rectangular stress block used to compute the plastic bending strength of a flexural member, and its significance to the design problem, was discussed by J. A. Ewing* in 1899. There may have been others even earlier. I cite him because, while deploring the use of what he termed a single "modulus of transverse rupture, $f = M_y/I$", to express the bending resistance of bars of ductile material, he nevertheless put his finger on the reason for the continuing practice.

He remarked that,

> "When a plastic material in which the tensile and compressive strengths f_t and f_c are equal is cast in the form of an I-beam in which the top and bottom flanges form nearly the whole of the section it will have a modulus of rupture not far from equal to f_t or f_c."

In other words, the shape factor of an I-section is so near unity that

$$M_y \cong M_p$$

As long as designers were concerned only with simple beams they could forget that there was any difference. And this they proceeded to do!

It was a Hungarian by the name of Kazinczy who is generally credited with having re-directed attention once more to the really important difference. In 1914 he published the results of some tests he had performed on fixed-ended beams and introduced the concept

*The Strength of Materials — Cambridge University Press.

of plastic hinge action to explain the greater bending strength of these beams as compared with their simply-supported counterparts.

During the next decade his work stimulated a number of investigators on the Continent, notably Prof. Maier-Leibnitz, at Stuttgart, who performed several illuminating experiments. In one series of tests he studied the effect of foundation settlement upon the bending strength of the continuous members they supported. He took three I-beams of equal uniform cross-section and equal length and rested them on knife-edge supports to form, in each case, two equal continuous spans. Each of these he loaded with equal pairs of concentrated loads, placed at the third point of each span. All of the supports for his first beam were at the same elevations. On the second test the ends of the beam were held down against the end supports, while the center support was raised until the computed bending stress in the extreme fibers at this support reached yield point. In other words, then as now, according to the codes, it was assumed that this beam would be unable to accept any downward third-point loads because of support settlement at the outer ends. For the third beam the center support was lowered the same distance below the end supports that had been raised above the end supports in the second test.

As one would expect today, based upon our present understanding of the simple plastic theory of bending, all three beams supported substantially the same downward applied third-point loading. At the time when deflections became excessive, due to the formation of mechanisms, the test loads recorded were 13.1, 13.0 and 13.45 metric tons, respectively.

It has required much time and copious research to demonstrate beyond all doubt that this striking agreement was more than an accident. But it is of interest to note, that as a result of all this testing, it has been shown that the plastic strength of an indeterminate structure can be computed with greater accuracy than the load producing the first yielding in the structure can be determined. This is because of residual stresses, resulting from rolling and fabrication and not reflected in the coupon tests, which initiate yielding sooner than might otherwise be anticipated. Fortunately for both elastic and plastic designs, the effect of these residual stresses upon the plastic bending strength of symmetrical shapes, such as I-beams, is negligible.

Arresting as were the tests performed by Maier-Leibnitz and other early investigators, a vast amount of study would be needed

before designs based upon plastic strength rather than upon some limiting computed elastic stress would be possible. What about portal frames wherein members would be subject to axial loading as well as bending? How much of their plastic bending strength would be available after providing for the axial load? How slender could individual members be and remain stable? Given a set of loads to be supported and the desired over-all dimensions of a supporting frame, how could one determine the required size of members; in short, what methods of frame analysis could one substitute for the numerous elastic methods which had already become so widely accepted for the solution of indeterminate structures?

One who sought the answers to these many perplexing questions was Prof. J. F. Baker, at the time located at the University of Bristol, England. He had been one of a group working under the sponsorship of the British Steel Structures Research Committee for several years, which had attempted to reconcile long-established and quite satisfactory orthodox design practice (with all its sweeping assumptions and approximations) with the newer theories of indeterminate structures that were receiving increasing classroom attention. The Recommendations for Design issued by that Committee in 1936, which do not appear to have been accepted by British designers with too much enthusiasm, raised considerable doubt in Prof. Baker's mind as any worthwhile improvement could be achieved purely on the basis of elastic design and working stress prescriptions.

Turning his attention to the plastic behavior of steel structures, he had already made a number of tests on model portal frames when his studies were interrupted by World War II. Returning to them in 1943, this time at Cambridge University, he assembled an able team of research assistants whose work over the next five years did much to expand and organize the body of knowledge concerning plastic behavior.

With the cooperation of the British Constructional Steelworks Association a short pamphlet was released providing instruction to the designer in methods of analysis of single span portal frames.

The same year (1948) the British Standard Specification for the Use of Structural Steel in Building (B.S. 449) was issued, containing an enabling clause covering the use of plastic design. This may be found in Part V of the Specification which classifies the design of steel frameworks in three categories: simple design, semi-

rigid design and fully rigid design. Under the third category it was provided that

> "For the purpose of such design, accurate methods of structural analysis shall be employed leading to a load factor of 2, based upon the calculated or otherwise ascertained failure load of the structure or any of its parts, and due regard shall be paid to the accompanying deformations under working loads, so that deflections and other movements are not in excess of the limits implied in this British Standard."

No other qualifications were laid down. Obviously the designer who would avail himself of the privilege of this single provision must himself be familiar with the various factors which are essential to the sound execution of plastic design. One would hardly expect, therefore, immediate widespread use of the method. Yet there are reported to be over 200 plastically designed buildings already constructed in England. Many of them I have seen, and I can assure you that they are all excellent examples of modern, economical steel construction.

Since 1946 a large amount of research on the plastic behavior of steel has been completed in this country, particularly at Lehigh University under the able direction of Prof. Lynn Beedle, assisted by Profs. R. L. Ketter and Bruno Thurlimann. The emphasis has been upon full-scale test specimens, loaded in the as-rolled condition and subject to fabrication of ordinary commercial quality. A considerable amount of testing has been done on columns, under conditions as they would exist in frames, subject to predictable ratios of axial load and end moments at ultimate loading.

The lateral stability of beams subject to plastic bending and hinge rotation likewise has been the subject of exhaustive investigation, as has the local stability of flanges and webs under various combinations of plastic bending, axial loads and shear of varying intensity. In fact, problems of stability have perhaps received more attention than all of the other aspects of the subject put together.

Concurrently, much study has gone into expanding, improving and simplifying the various methods of analysis and presenting them in the most useful form possible for the designers. Very notable success has been achieved along this line in the field of multi-span, single-story frames.

Presently, the Lehigh group is preparing a complete "Commentary" summarizing and documenting their conclusions to date and presenting them in the form of rules for the use of the designer. It is expected that this will eventually be published as a Joint ASCE-Welding Research Council Report.

Concurrently the American Institute of Steel Construction has been preparing a Manual of Plastic Design in Steel. This will contain the same rules of design as will appear in the Commentary. While not intended as a complete textbook on plastic design, those methods deemed most useful in the solution of continuous beam problems and single- and multiple-span rigid frames will be discussed briefly and applied in the working out of numerous illustrative examples.

Formulas, moment coefficients, and other useful data, not unlike those usually found in reference textbooks dealing with elastic design, will be covered in an appendix applicable for the case of plastic design. Numerous time-saving charts will be provided for the rapid development of complicated frame analyses. A table, similar to the Section Modulus table found in the present AISC Handbook, will list the M_p value of all rolled shapes lying within the prescribed flange width-thickness limitation, in descending order of their magnitude, and give such other profile data as enters into plastic design computations.

The eight sections, comprising the plastic design supplement to the AISC Specification, will be presented in the terse style of that document, and then discussed at greater length elsewhere in the new manual. A resumé of these eight sections, as they stand today, follows. It must be remembered that they have not as yet (1957) been formally adopted and therefore may be subject to later revisions.

1. Scope

It would be permissible that continuous beams and rigid frames classified as Type 1 construction in Sect. 1 of the present AISC Specification be proportioned, on the basis of their maximum strength as determined by rational analysis, for not less than 1.85 times the given live load and dead load nor less than 1.40 times these loads plus any specified wind or earthquake forces. When so designed, the provisions relating to allowable working stress, contained in Sects.

1, 12, 13, 14 and 15 of the present AISC Specification, would be waived.

Not included in this scope are continuous crane girders, although it would be permissible to design their supporting bents plastically. This exception requires some explanation.

While structures coming within the scope of the present specification are generally thought of as being statically loaded, it is recognized that they are subject to a vagary of loading patterns. Since these patterns are of a random nature it can be assumed that the critical overload condition would occur when all of the given design loads are increased to the limit of the prescribed load factor at one time. The plastically designed frame would be deemed adequate if it could sustain but one application of such overloading, just as the simple beam, designed under present working stress provisions presumably can sustain but one such overloading.

However, it can be shown (mathematically, at least, if the beneficial effect of strain hardening is neglected) that a cyclic pattern producing maximum loading first on one side of a support of a continuous structure, then on the other side of that support, and finally on both sides, can cause a progressive increase in inelastic (permanent) deflection at an overload level lower than that to which all of the loads can be raised simultaneously for one time. However, there is an overload level below which the increase in plastic deflection, due to successive load cycles, would cease. This is known as the shakedown load. Generally the difference between ultimate static load and shakedown load is at most a few percent, and the probability of a random pattern repeating itself in a cyclic manner enough times to produce a significant reduction in ultimate strength is negligible.

A pair of equal wheel loads, spaced a constant distance apart on the trucks of a bridge crane, and moving alternately on opposite sides of a crane girder support, cannot be regarded as providing a random loading pattern. Furthermore, the wheel concentrations generally account for nearly all of the design load.

Of course, with the ratio of truck wheel base to girder span given, it would be a simple matter to compute the ratio of ultimate static to shakedown load, and then to increase the prescribed 1.85 load factor by this ratio. However, even when it might be advisable to investigate the nature and magnitude of bending stress fluctuations at service load level, as a precaution against fatigue failure. For

the present, at least, and until the subject has been given more study, it has seemed expedient to rule out the plastic design of continuous crane girders.

2. Columns

Axial loading amounting to no more than 15 percent of the plastic axial strength of columns in rigid frames reduces the bending strength of these members at most no more than two or three percent and under the proposed rules would be neglected. The primary effect of a larger axial load is to reduce the available bending strength of the shape in direct proportion to the increased magnitude of this load.

The effective bending strength may be further reduced by reason of column slenderness, the amount of the reduction being dependent upon the nature of the moments at the ends of the columns.

For simplicity in design, all columns would be treated as if conforming to one of three cases, distinguishable by their end moment conditions, as shown in Fig. 2. Note that the formulas are concerned with the effective bending strength M_o of a trial shape having the physical properties M_p and P_y, in the presence of a given axial load P. An upper limit of 0.6 would be placed on the ratio P/P_y and the limiting value of l/r_x is 120. Few economically designed rigid frame columns will have a major axis slenderness ratio in excess of say 40 or 50, or be required to support an ultimate axial load much in excess of $0.3P_y$.

Suggested numerical values for the parameters B, G, K and J for values of l/r_x up to 120, are shown in Tables I and II. They have been derived from a rigorous analysis involving numerical integration of the moment diagram refined through successive approximations. In this way the effect of eccentricities resulting from the true deflected shape of the member has been included in computing the critical value for M_o. Included in the analysis is the effect of residual cooling stresses having the magnitude and distribution generally found in rolled shapes. For Case II it is assumed that the moment at one end is zero. If in fact there is some moment here, having the same sign as that of the other end moment, the proposed formula becomes somewhat conservative although not wastefully so. Likewise, if the moment of opposite sign at one end of a Case III column is less than that at the other end the suggested formula would yield conservative answers.

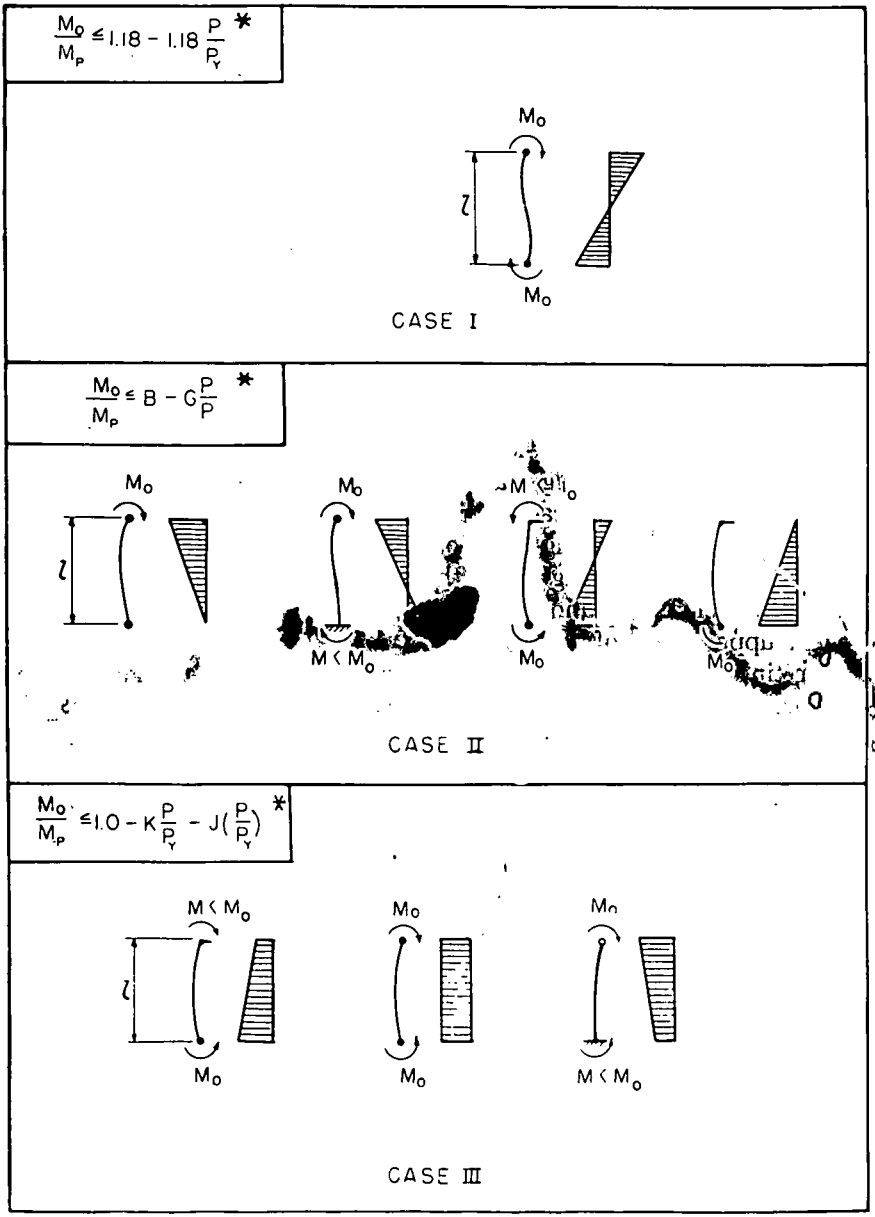

* APPLICABLE WHEN $l/r_x < 120$ AND $P/P_Y < 0.6$

FIG. 2.

Case II Column Formula

$$\frac{M_a}{M_p} = B - G\left(\frac{P}{P_y}\right)$$

TABLE I

ℓ/r	B	G	ℓ/r	B	G	ℓ/r	B	G
16	1.140	1.172	51	1.164	1.271	86	1.201	1.616
17	1.140	1.174	52	1.165	1.276	87	1.202	1.633
18	1.141	1.177	53	1.165	1.281	88	1.204	1.651
19	1.141	1.179	54	1.166	1.286	89	1.205	1.669
20	1.142	1.182	55	1.167	1.292	90	1.206	1.688
21	1.142	1.184	56	1.168	1.297	91	1.207	1.707
22	1.143	1.187	57	1.169	1.303	92	1.209	1.726
23	1.143	1.189	58	1.170	1.310	93	1.210	1.746
24	1.144	1.191	59	1.171	1.316	94	1.211	1.767
25	1.145	1.194	60	1.172	1.323	95	1.213	1.788
26	1.145	1.196	61	1.173	1.330	96	1.214	1.810
27	1.146	1.198	62	1.174	1.337	97	1.215	1.832
28	1.146	1.200	63	[illegible]	1.344	98	1.217	1.855
29	[illegible]	1.203	64	[illegible]	1.352	99	1.218	1.879
[illegible]	[illegible]	1.205	65	[illegible]	1.360	100	1.220	1.903
31	1.148	1.207	66	1.178	1.369	101	1.221	1.928
32	1.149	1.209	67	1.179	1.377	102	1.222	1.953
33	1.150	1.212	68	1.180	1.386	103	1.224	1.979
34	1.150	1.215	69	1.181	1.396	104	1.225	2.006
35	1.151	1.217	70	1.182	1.406	105	1.227	2.033
36	1.152	1.220	71	1.183	1.416	106	1.228	2.061
37	1.152	1.222	72	1.184	1.426	107	1.230	2.090
38	1.153	1.225	73	1.186	1.437	108	1.231	2.119
39	1.154	1.228	74	1.187	1.448	109	1.233	2.149
40	1.155	1.231	75	1.188	1.460	110	1.234	2.179
41	1.155	1.234	76	1.189	1.472	111	1.236	2.211
42	1.156	1.237	77	1.190	1.485	112	1.237	2.243
43	1.157	1.240	78	1.191	1.497	113	1.239	2.275
44	1.158	1.243	79	1.192	1.511	114	1.240	2.309
45	1.159	1.247	80	1.194	1.524	115	1.242	2.343
46	1.159	1.251	81	1.195	1.539	116	1.243	2.378
47	1.160	1.254	82	1.196	1.553	117	1.245	2.414
48	1.161	1.258	83	1.197	1.568	118	1.247	2.450
49	1.162	1.263	84	1.198	1.584	119	1.248	2.487
50	1.163	1.267	85	1.200	1.600	120	1.250	2.525

CASE III COLUMN FORMULA

$$\frac{M_o}{M_p} \leqq 1.0 - K\left(\frac{P}{P_y}\right) - J\left(\frac{P}{P_y}\right)^2$$

TABLE II

ℓ/r	K	J	ℓ/r	K	J	ℓ/r	K	J
1	.434	.753	41	1.015	.149	81	1.824	-.738
2	.449	.736	42	1.032	.133	82	1.850	-.769
3	.463	.720	43	1.048	.116	83	1.877	-.801
4	.478	.703	44	1.064	.0998	84	1.903	-.833
5	.492	.687	45	1.081	.0832	85	1.930	-.866
6	.506	.671	46	1.097	.0663	86	1.958	-.900
7	.520	.655	47	1.114	.0492	87	1.986	-.934
8	.534	.640	48	1.131	.0318	88	2.014	-.969
9	.548	.624	49	1.148	.0143	89	2.042	-1.004
10	.562	.609	50	1.166	-.0036	90	2.071	-1.041
11	.576	.594	51	1.183	-.0[illegible]7	91	2.101	-1.077
12	.590	.579	52	1.201	-.040[illegible]	92	2.130	-1.115
13	.604	.564	53	1.219	-.0588	93	2.161	-1.153
14	.619	.549	54	1.237	-.0777	94	2.191	-1.192
15	.633	.534	55	1.256	-.0970	95	2.222	-1.231
16	.647	.519	56	1.274	-.117	96	2.254	-1.272
17	.661	.504	57	1.293	-.137	97	[illegible]	-1.3[illegible]
18	.675	.490	58	1.312	-.157	98	[illegible]	-1.3[illegible]
19	.689	.475	59	1.332	-.177	99	2.35[illegible]	.3[illegible]
20	.703	.46[illegible]	60	1.351	-.198	100	2.384	-1.44[illegible]
21	.717	.447	61	1.371	-.220	101	2.417	-1.484
22	.731	.432	62	1.391	-.241	102	2.451	-1.529
23	.746	.418	63	1.411	-.263	103	2.486	-1.575
24	.760	.403	64	1.432	-.286	104	2.521	-1.621
25	.774	.389	65	1.452	-.309	105	2.556	-1.668
26	.789	.374	66	1.473	-.332	106	2.592	-1.716
27	.803	.360	67	1.495	-.356	107	2.628	-1.765
28	.818	.345	68	1.516	-.380	108	2.665	-1.814
29	.832	.331	69	1.538	-.404	109	2.70[illegible]	-1.865
30	.847	.316	70	1.560	-.429	110	2.741	-1.916
31	.862	.301	71	1.583	-.455	111	2.779	-1.968
32	.877	.287	72	1.605	-.481	112	2.818	-2.021
33	.892	.272	73	1.628	-.507	113	2.857	-2.075
34	.907	.257	74	1.652	-.534	114	2.897	-2.123
35	.922	.242	75	1.675	-.562	115	2.937	-2.185
36	.937	.227	76	1.699	-.590	116	2.978	-2.242
37	.953	.211	77	1.724	-.618	117	3.020	-2.300
38	.968	.196	78	1.748	-.647	118	3.062	-2.358
39	.984	.180	79	1.773	-.677	119	3.104	-2.417
40	1.000	.165	80	1.799	-.707	120	3.147	-2.478

It will be helpful in evaluating the proposed rules to compare the results of the new equations with the present AISC formulas. This can be done by means of a non-dimensional plotting if we adjust the terms of the familiar interaction formula

$$\frac{f_a}{F_a} + \frac{f_b}{F_b} = 1$$

to reflect conditions as they would be at 1.85 times design load, recognizing that M_p rather than M_y is the true index of bending strength.

The curves shown in Fig. 3 are for the case where $l/r_x = 80$. As such, they represent the upper limit of practical design problems of the type for which the rules have been drafted. Note that the dotted line, representing the present AISC formulas, is very conservative for low values of P/P_y, but in fair agreement with Case III columns at higher values. However, Case III is one which is seldom encountered in rigid frames. It may be seen that the present AISC formulas are wastefully conservative in the design of Case II and Case I columns, the usual types. For less slender columns the present formulas err even more on the conservative side.

3. Shear

Tests have shown that shear is not the important factor in plastic design that was at one time assumed. This can be attributed to the beneficial influence of strain hardening.

Only two provisions concerning shear are contained in the proposed rules.

The unit shear stress resulting from ultimate loading, computed on the basis of a transverse web area w.d, would not be permitted to exceed 18 ksi.

Within the boundaries of a connection of a beam and column having webs which lie in the same common plane the unreinforced thickness of the web would not be permitted to exceed $\frac{0.6M}{A}$, where M is the algebraic sum of moments (in kip-ft.) applied on opposite sides of the connection web boundary and A is the planar area of the connection web, expressed in square inches.

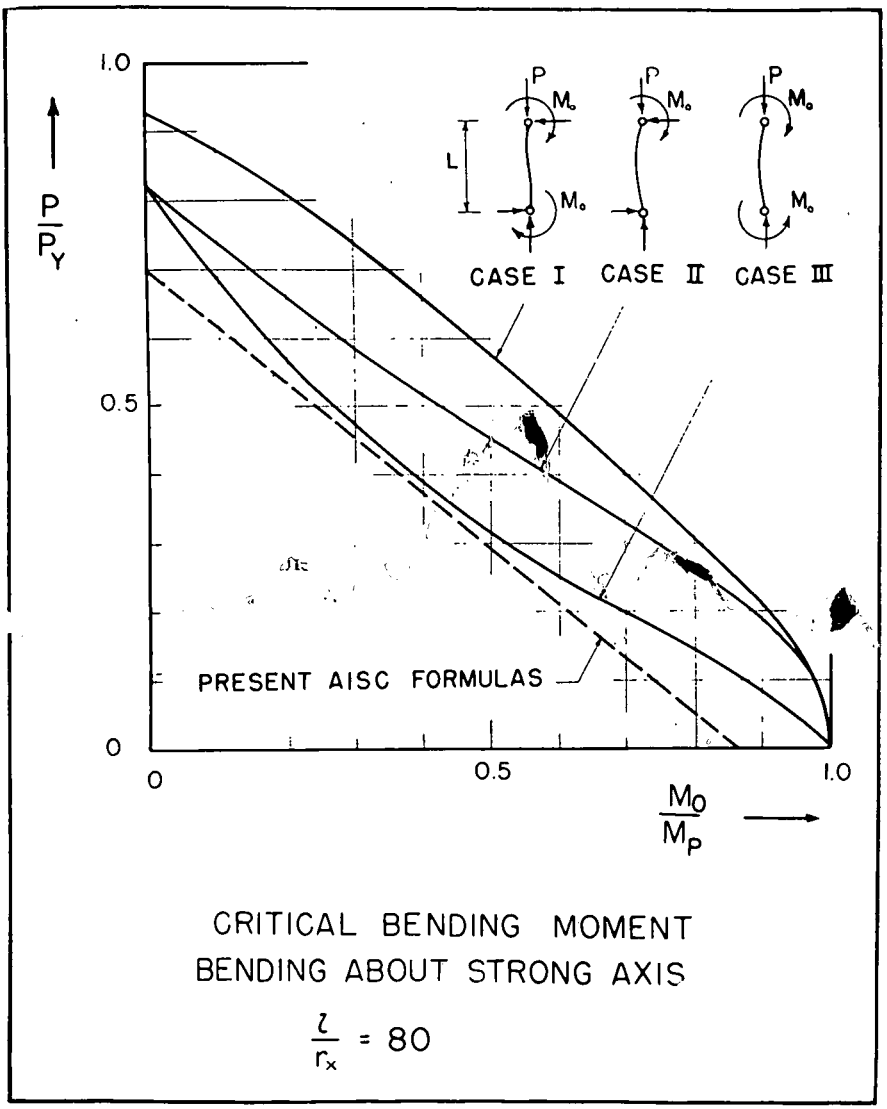
1.0
0.5
0
P/P_Y
P
M₀
L
CASE I
CASE II
CASE III
PRESENT AISC FORMULAS
0
0.5
1.0
M_O/M_P
CRITICAL BENDING MOMENT
BENDING ABOUT STRONG AXIS
l/r_x = 80

FIG. 3.

An example will serve to illustrate the application of this second limitation.

Illustrative Example

Is web reinforcement necessary at the interior connection shown in figure 4?

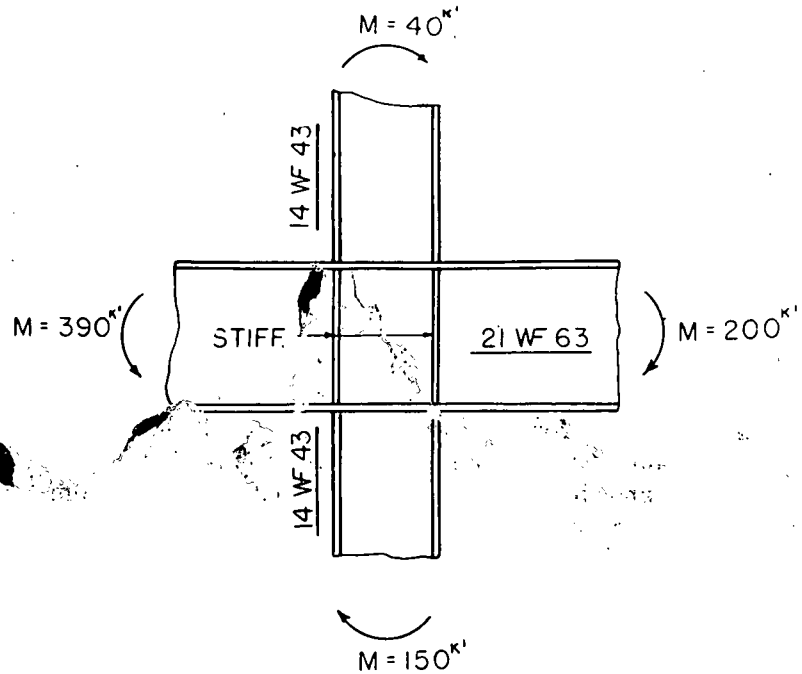

FIG. 4.

Algebraic sum of clockwise and counter-clockwise moments on opposite sides of joint:

$$M = 390^{k'} - 200^{k'} = 150^{k'} + 40^{k'} = 190^{k'}$$

$$\text{Req'd } w = \frac{0.60 \times 190^{k'}}{14'' \times 21''} = 0.39''$$

For 14 WF 43, w = 0.308″

For 21 WF 62, w = 0.40″

Run 21 WF through the joint without reinforcement.

4. Web Crippling

The present formulas for the prevention of web crippling at points of concentrated loading have been shown to be conservative when members designed in accordance with them are tested at ultimate loading. Ordinarily, stiffeners would be required as a continuation of the flanges of a beam rigidly framed to the flange of a column. However, if the beam is small as compared to the size of the column this might not be the case. Stiffeners would not be required across the web of the supporting column when its thickness

$$w \leqslant \frac{A}{d + 6k}$$

A being the area of the beam, d its depth, and k being the k-distance of the column profile.

5. Minimum Thickness

To prevent local buckling, the width-thickness ratio of beam flanges would be more severely restricted than in the present AISC Specification. The proposed limiting value of 17, however, admits all but a half dozen of the presently available hot-rolled shapes.

Stiffeners and the free edges of cover plates would be limited to a maximum width-thickness ratio of 8½.

The width-thickness ratio of cover plates, between longitudinal lines of welds or fasteners, and of webs of columns whose ultimate axial load P is greater than $0.27P_y$ would not be permitted to exceed 43. The width-thickness ratio for the webs of less heavily loaded columns, however, could be increased to as much as 70, in inverse proportion to the ratio P/P_y.

6. Connections

Rigid connections would be designed, on the basis of yield point stress, to resist the moments, shears and axial loads to which they would be subjected at ultimate loading.

Tapered and curved corner connections would be proportioned to remain elastic at ultimate loading.

Welds and rivets would be proportioned on the basis of 1.85 times their present working values and H.T. bolts on the basis of their specified minimum proof load.

7. Lateral Bracing

Particular attention would be given to the distance between points of lateral support immediately adjacent to hinge points which would be required to rotate plastically to form a mechanism at ultimate loading. Elsewhere, the bracing requirements would be no different than for an elastically designed frame.

Lateral support would have to be provided at all points where plastic hinge rotation is assumed as the basis of a design, i.e., at all hinges except the last to form. At this latter point, short of ultimate loading the framing is assumed to behave elastically; its lateral support requirements, therefore, would be no greater than for an elastic frame.

It has been found that the maximum safe distance between a rotating hinge point and the next nearest point of lateral support is dependent upon (1) the steepness of the moment gradient, (2) the degree of restraint afforded by adjacent portions of the frame, and (3) the required amount of rotation. To insure adequate rotation capacity it has been suggested that this unsupported distance be limited to

$$l_{lr} = \left(60 - 40\,\frac{M}{M_p}\right) r_y$$

but not less than $35r_y$, where r_y is the radius of gyration of the member about its y-axis and M and M_p are the moments at the ends of the unbraced length. If the length l_{lr} contains a point of contraflexure the signs of M and M_p are different and the sign of the ratio M/M_p will be negative, making the second term within the parenthesis additive.

Illustrative Example

Determine the adequacy of the purlins and girt spacing for the conditions shown in figure 5.

Critical purlin spacing at Sect. AB

$$\frac{M}{M_p} = \frac{325}{860} = 0.38$$

$$\left[\ 60 - (40 \times 0.38)\ \right] 2.06 = 92.5'' > 7'\,6'' \qquad \text{(O.K.)}$$

Critical girt spacing at Sect. BC

$$\frac{M}{M_p} = \frac{602}{860} = 0.70$$

$$35 \times 2.06 = 72 = 6'\,0'' \qquad \text{(O.K.)}$$

Properly framed or otherwise braced purlins and girts, to which ordinary siding or roofing material is securely fastened, would be

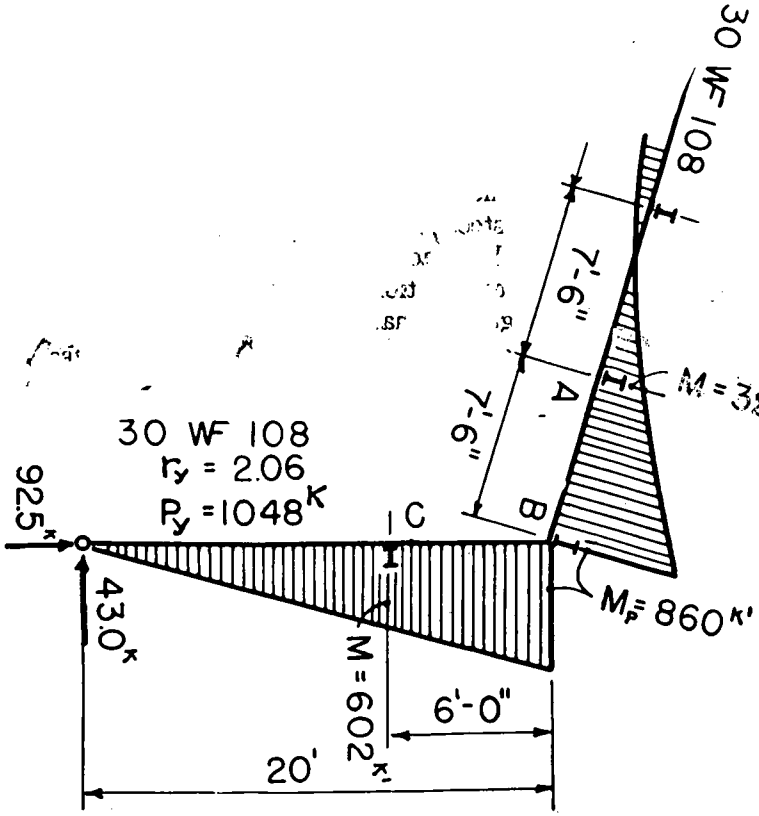

FIG. 5.

considered as providing adequate lateral support against buckling. It is understood, of course, that in addition to this local support, the building as a whole would be braced for wind and other forces in the usual manner.

8. Fabrication

The final section of the proposed rules cautions against the use of sheared edges and full-size punched holes in areas subject to plastic bending at ultimate load. With these exceptions the provisions of the present AISC Specification with respect to workmanship would govern.

PILOT PLANT TREATMENT OF SEWAGE-TEXTILE WASTE MIXTURES

By Robert H. Culver*

(Presented at a meeting of the Sanitary Section, B.S.C.E., held on March 5, 1958.)

In the chemical industry the standard operating procedure for the design and construction of a new plant consists of three, or possibly four phases. These are the laboratory or bench scale experiments, the pilot plant stage, sometimes a semi-plant scale stage, and, finally, the design of the full-scale plant. Such a stepwise procedure for design and testing has been found to be economically advantageous in spite of the fact that the theory and performance of the individual unit processes being employed are well known. The pilot plant method of design permits the designer to evaluate the performance of the individual units in various combinations of arrangement and loading using the particular material to be processed. The penalties of not pilot planting, says West Virginia University's J. A. Kapincky, show up in overdesign, production fiascos, and increased starting costs.

Sanitary engineers recognize the advantages of this procedure for the design of sewage treatment plants, particularly when industrial waste waters are to be treated alone or in combination with domestic sewage. An example of the use of a pilot plant to furnish design data for a full-scale sewage-industrial waste treatment plant is provided by recent pilot plant experience at Greensboro, North Carolina.

Greensboro is a city of about 91,000 people. It is situated in the upper reaches of the Haw River Basin between two small tributaries of Reedy Fork Creek as shown on Figure 1. The domestic sewage and most of the industrial waste waters are treated in two municipal sewage treatment plants, one located on South Buffalo Creek, the other on North Buffalo Creek. The present problem is concerned with the improvement and enlargement of the North Buffalo Creek sewage treatment plant.

The existing North Buffalo sewage treatment plant, built in 1938, was designed as a conventional activated sludge plant. It was designed to treat 6.5 mgd of mixed sewage and textile waste waters. In addi-

*Engineer — Camp, Dresser & McKee, Consulting Engineers.

tion to the normal treatment units for activated sludge, chemical flocculation was provided ahead of the primary settling basins. For several years this plant gave satisfactory performance, but then because of a gradual increase in the quantity of textile waste waters, it became overloaded and the process failed. Since about 1941 the plant has been operated as a chemical precipitation treatment plant.

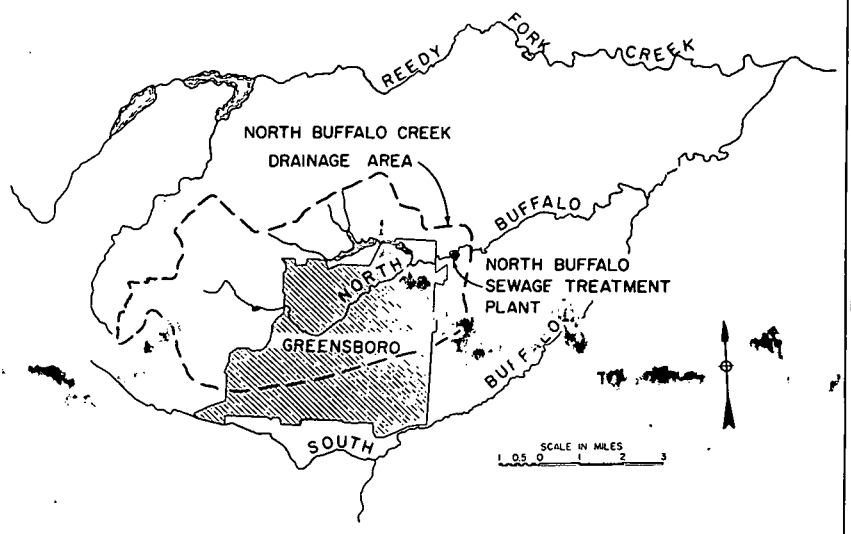

FIG. I NORTH BUFFALO CREEK DRAINAGE AREA

At the present time the sewage-textile waste water flow into the North Buffalo sewage treatment plant averages about 11.0 mgd. About 40% of this flow or 4.4 mgd is textile waste water containing caustic kier liquor, starch waste and various dye wastes, principally indigo and sulfur with some chrome. The textile waste waters pass through one or two lagoons before entering the municipal sewerage system. Table 1 is a typical analysis of the municipal sewage and textile waste waters before they are mixed. Table 2 presents a typical analysis of the mixed wastes reaching the sewage treatment plant.

The principal items in which the mixed waste water composition

differs from the composition of municipal sewage are the high BOD, 460 mg/l; the high total solids and volatile solids, 1,800 and 700 mg/l respectively; the high alkalinity, 750 mg/l; and the high pH, 11.5. The relatively low ratio of suspended solids to BOD is of particular

TABLE 1. TYPICAL ANALYSES OF MUNICIPAL SEWAGE AND TEXTILE WASTE WATERS AT GREENSBORO, NORTH CAROLINA

		Textile Waste Water	
	Municipal Sewage	Revolution Pond Effluent	White Oak Pond Effluent
Per Cent of total by volume	60	10	30
5-day BOD, mg/l	245	1,000	460
Suspended solids, mg/l	180	180	90
Total solids, mg/l	630	5,700	2,620
Total volatile solids, mg/l	315	1,660	1,040
Alkalinity (as $CaCO_3$), mg/l	185	1,430	1,460
pH	7.1	11.5	11.9

TABLE 2. TYPICAL ANALYSES OF MIXED MUNICIPAL SEWAGE AND TEXTILE WASTE WATER AT NORTH BUFFALO SEWAGE TREATMENT PLANT GREENSBORO, NORTH CAROLINA

5-day BOD, mg/l	460
Suspended solids, mg/l	180
Total solids, mg/l	1,800
Total volatile solids, mg/l	700
Alkalinity (as $CaCO_3$), mg/l	750
Nitrites (as NO_2) mg/l	0.0
Nitrates (as NO_3), mg/l	0.7
Total ammonia nitrogen (Kjeldahl)(as NH_3), mg/l	10
Free ammonia (as NH_3), mg/l	8
Phosphates (as PO_4), mg/l	15
pH	11.5
Temperature, °C	27

significance. On the basis of this low ratio the expected degree of BOD removal by primary sedimentation was estimated to be too small to justify the cost of including the required basins in the treatment works.

The drainage area of North Buffalo Creek at the sewage treatment plant is about 23 sq mi. The dry weather flow below the treatment plant frequently consists of little more than the plant effluent. A comparison of the highly pollutional nature of the waste waters with the small quantity of dilution water available indicated that a very high degree of treatment, about 90% removal of BOD, would be necessary to prevent a nuisance in the receiving stream. In order to design a treatment plant which would be reasonably certain of yielding an effluent of the quality required by the stream characteristics at the lowest possible cost, it was decided to precede the design of a full-scale treatment plant by a pilot plant investigation. The objectives of the pilot plant operation were: (1) to determine the feasibility and applicability of available sewage treatment techniques to the treatment of the Greenburgo sewage-textile waste mixture; (2) determination of design factors applicable to this particular waste; (3) to discover any unusual characteristics of the mixture, which might not be apparent from a chemical analysis, but which would affect the treatment to be employed; and (4) to demonstrate the results which might be expected from a full-scale plant employing the same treatment processes.

The pilot plant was made up of two holding tanks, a constant head box for flow regulation, a carbonation tank, a trickling filter and later in the experimental operation a second trickling filter, a two-compartment aeration tank, twin two-compartment settling tanks and one combination flocculation and mechanically cleaned settling basin, a heated sludge digester, and a column made from lucite pipe which would be alternately fitted with a porous plate bottom and gas-tight cover for gas transfer studies or with a picket fence type of stirring mechanism for studying sludge settling and compaction. There were also a number of pumps, gas meters, and liquid measuring devices. A brief description of each individual unit follows.

The two holding tanks were 6 feet in diameter and 5 feet deep and were constructed from steel plate. Each tank would hold approximately 1,000 gallons of the mixture to be fed to the pilot plant. The daily feed was maintained in a uniform state of mixture by propellers mounted in the bottom of each tank.

The carbonation tank was 2 feet long by 3.5 inches wide and 4 feet deep. It was constructed from steel plate. The CO_2 gas was diffused through porous stone fish-tank type diffusers.

The first stage trickling filter was 4 feet in diameter and 4.5 feet deep. The filter medium was crushed granite screened to a size ranging from 1 to 2-1/2 inches. It was supported on a steel grating across the bottom of the filter. The filter influent was distributed over the surface of the filter by the means of a tipping trough. The second stage trickling filter was 2.67 feet in diameter by 4.5 feet deep. The medium was crushed granite 1 to 2-1/2 inches supported on steel grating. Distribution was by means of a tipping trough.

The aeration tank, Fig. 2, was 6 feet long by 4 feet deep and was divided by a longitudinal wall into two equal parts, each 1.5 feet wide. One side of the aeration tank was used to investigate the so-called step aeration process. This side of the aeration tank was divided into four equal compartments by vertical baffles which extended from the water surface to the bottom of the tank. Each compartment was connected with adjacent compartments by a number of 1-inch diameter holes bored through the baffles. The other side of the aeration tank was used to study the upflow settling aeration process. In the upflow settling aeration process a single compartment was employed and was connected directly to the upflow settling chamber as shown in Fig. 2. In both aeration tanks the air was supplied through porous stone fish-tank type diffusers.

Secondary settling following the secondary trickling filter was carried out in a basin 4 feet long by 8 inches wide with a bottom which sloped from a water depth of 3 feet at the influent end to a water depth of 1 foot at the effluent end. The surface area of this settling tank was 2.66 sq ft. The volume was approximately 40 gallons. The tank was cleaned by a hand squeegee and had a draw-off pipe at the lower end of the bottom. The activated sludge from the step-aeration process was settled in a mechanically cleaned secondary settling basin which was 1 ft wide by 3.25 ft long. The surface area of this tank was 3.25 sq ft and it had a volume of about 60 gallons. At the influent end of this secondary settling basin was a flocculation chamber divided into two compartments, each with a surface area of 1 sq ft. Slow mixing by means of a rotating paddle was provided in each compartment of the flocculation chamber.

The heated digester was made up from a 20-gallon stoneware

crock fitted with a liquid seal gastight cover and a picket fence type stirrer. The digester was immersed in a 55-gallon drum which formed a water bath. The water in the water bath was maintained at a constant temperature of 90°F. The digester gas was led off to a gas holder where it could be measured at a constant pressure.

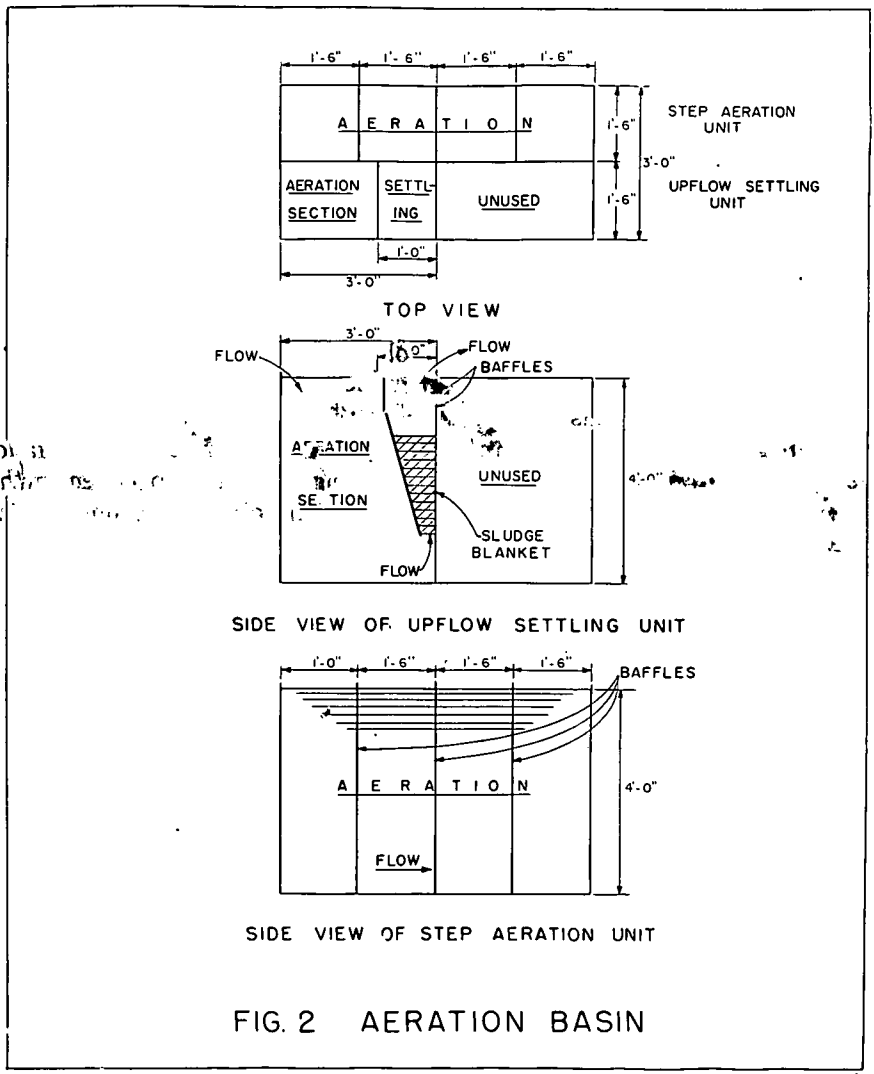

FIG. 2 AERATION BASIN

A lucite column was constructed from standard lucite pipe 10 inches outside diameter and 13 ft high. It contained connections at the bottom for admitting gas and for draining the column. The top of the column was fitted with a removable gastight cover with appropriate valves and connections for obtaining samples of gas for gas analyses and for siphoning off the liquid under test. In making gas absorption studies the counter-current flow principle was employed. Liquid was added at the top of the column and removed from the bottom while air or carbon dioxide was admitted at the bottom of the column and permitted to escape from vents at the top. Diffusion of the gas was accomplished by means of a standard porous plate (permeability about 60) fitted to form a false bottom in the column.

Advantage was also taken of the depth available in the lucite column to study sludge settling and compaction. The porous plate and gastight cover could be removed and replaced with a picket fence type of stirring mechanism. Sludge could then be added to any depth up to 12.5 ft and its settling rate observed under either quiescent conditions or while being slowly [illegible]

The pilot plant was housed in a wood frame building 25 ft square located adjacent to the existing control building at the North Buffalo sewage treatment plant. The pilot plant building was equipped with hot and cold water, electricity, compressed air, circulating hot water heat, and a telephone. Equipment was available for making such control tests as sludge volume index, pH, dissolved oxygen and temperature. A complete laboratory was available in the control building of the existing sewage treatment plant.

The pilot plant was operated 24 hours a day seven days a week by experienced sewage treatment plant operators. The chemical and biological analyses required to evaluate the results obtained in the various processes were made six days each week by a sanitary technician under the direction of James C. Pangle, the pilot plant superintendent, who also conducted many of the special tests required.

Initial Operation

The pilot plant was placed in operation and initially treated the sewage-industrial waste mixture then in the outfall sewer. During the initial break-in period of several weeks pumping rates were adjusted, the "bugs" were worked out, the biological processes were developed, and the operating routine established. When all was functioning as

well as possible, the inflow was changed to domestic sewage alone. This was done to establish an operational base for the pilot plant against which the results obtained when treating sewage-industrial waste mixtures could be compared; in other words, to learn whether

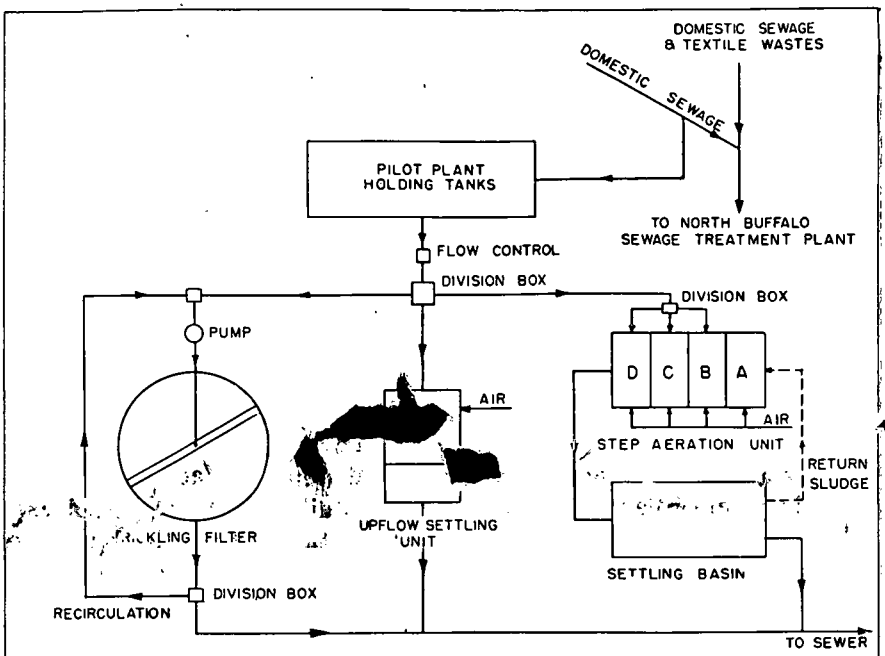

FIG. 3 FLOW SHEET WHEN TREATING DOMESTIC SEWAGE

the sewage-industrial waste mixture was easier or more difficult to treat than domestic sewage and to estimate the extent of the difference.

Figure 3 is the flow sheet for the pilot plant when treating domestic sewage alone. The daily requirement of sewage was first pumped to the holding tanks. Here it was stored until treated. The pump discharged into the holding tanks through a basket type of

screen having about a 1/4-inch mesh. All extremely coarse particles were thus removed. The sewage in the holding tanks was constantly stirred to maintain uniformity of feed. This procedure was followed in order to establish a constant loading on the treatment units during each 24-hr period. The sewage was pumped from the holding tanks by positive displacement pumps to each of the biological treatment units. Three biological treatment processes were investigated. These were: (1) single-stage high-rate trickling filter; (2) activated sludge using the step-aeration process; and (3) activated sludge using the upflow settling process. The three processes were operated in parallel for the initial tests on domestic sewage.

The trickling filter was operated with a 2 to 1 recirculation ratio at all flows. The organic loading on the filter fluctuated slightly from day to day due to variations in the strength of the sewage. When it was desired to increase the organic loadings materially, the hydraulic loadings were increased proportionally to the desired increase in organic loading. The hydraulic loadings, including recirculation, varied from 7.5 mgad to 3.6 mgad. The organic loadings, based on influent 5-day BOD and not including the BOD in the recirculating flow, varied from about 950 lbs/acre-ft/day to about [illegible]50 lbs/acre-ft/day.

The performance of the trickling filter when treating domestic sewage is shown on Fig. 4. In this figure the filter loading in lbs of 5-day 20°C BOD applied per acre-ft per day is plotted against the removal expressed in the same units. The removal refers to the BOD removed in the filter alone and does not include any removal by secondary settling.

The activated sludge process using the step-aeration method was carried out in four equal aeration stages. Settled activated sludge was added to the first stage at a rate equivalent to 25% of the rate of raw sewage feed. One third of the raw sewage feed was added in each succeeding stage. The theoretical detention time based on a total aeration tank volume of 270 gallons was about 7.2 hours with a raw sewage feed of 0.5 gpm. The average removal of 5-day BOD was 74%, ranging from about 41% to 93.5%. Removals were below 50% on five days during the two months' trial. During this entire two-month test period the mixed liquor suspended solids were separated by plain sedimentation not preceded by flocculation.

The effluent suspended solids concentration fluctuated from a low of 8 mg/l to a high of 368 mg/l. The tests made with the step-aeration

unit on raw sewage cannot be compared with the results obtained later with sewage-textile waste mixtures because flocculation was added ahead of the secondary settling basin at the time the pilot plant feed was changed. Flocculation resulted in a more uniform removal of suspended solids by the secondary settling basin.

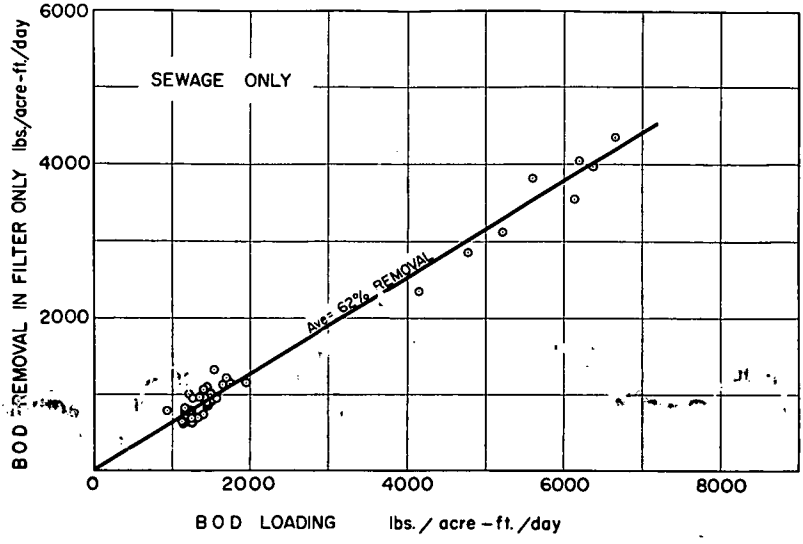

FIG. 4 TRICKLING FILTER PERFORMANCE

The rate of flow to activated sludge process using the upflow settling method was at the same rate as the step-aeration system. However, the theoretical detention time in the aeration compartment was about 3.7 hours and about 1 hour in the settling compartment. The average mixed liquor suspended solids concentration was 2,127 mg/1. The average removal of 5-day BOD was 78%.

The higher efficiency of upflow settling unit is attributed to a more uniform suspended solids removal in the upflow settling compartment in which all of the flow passed upwards through a suspended blanket of sludge. The multiple opportunities for contact between fine suspended solids particles from the aeration compartment

with the larger suspended solids particles in the sludge blanket proved effective in removing these fine particles.

The upflow settling system was not by any means foolproof, however, but required constant attention to prevent the top of the sludge blanket from building up to such an extent that large suspended solids particles were carried from the top of the blanket into the effluent syphon pipe. The sludge blanket level was maintained within effective limits by withdrawing excess sludge when the blanket was observed to rise too close to the effluent syphon.

Treatment of Sewage and Textile Waste Mixtures

After the basic performance of the various treatment units had been established using domestic sewage, the influent feed was changed to the sewage-textile waste water mixture reaching the sewage treatment plant through the city outfall sewer. The flow diagram for the treatment processes used in treating the sewage-textile waste water mixture is shown in Figure 5. The daily supply of sewage-waste mixture was first pumped through ¼″ basket-type screens into the holding tanks from which it flowed by gravity through a constant head box into the carbonation chamber and thence to the pump suction box of the trickling filter. The contents of the holding tanks were constantly stirred to maintain uniformity of feed. In the pump suction box the untreated waste water mixture was mixed with the recirculation effluent from the trickling filter. The filter effluent flowed to a division box. In the division box the flow was divided between the trickling filter recirculation flow which returned to the pump suction box, and the flow to the secondary biological treatment units. The activated sludge process was employed for secondary biological treatment.

Part of the flow was directed into each of the activated sludge processes, that is, the step-aeration process and the so-called upflow settling process. The effluent from the settling divisions of the two activated sludge processes was discharged back to the sewer.

Carbonation

In the carbonation tank the pH of the raw sewage-waste mixture was reduced from about 11.5 to pH 9 or 9.5. Bottled carbon dioxide was used in the pilot plant for carbonation of the mixture. The shallow depth of the carbonation tank (4 ft) did not permit a contact

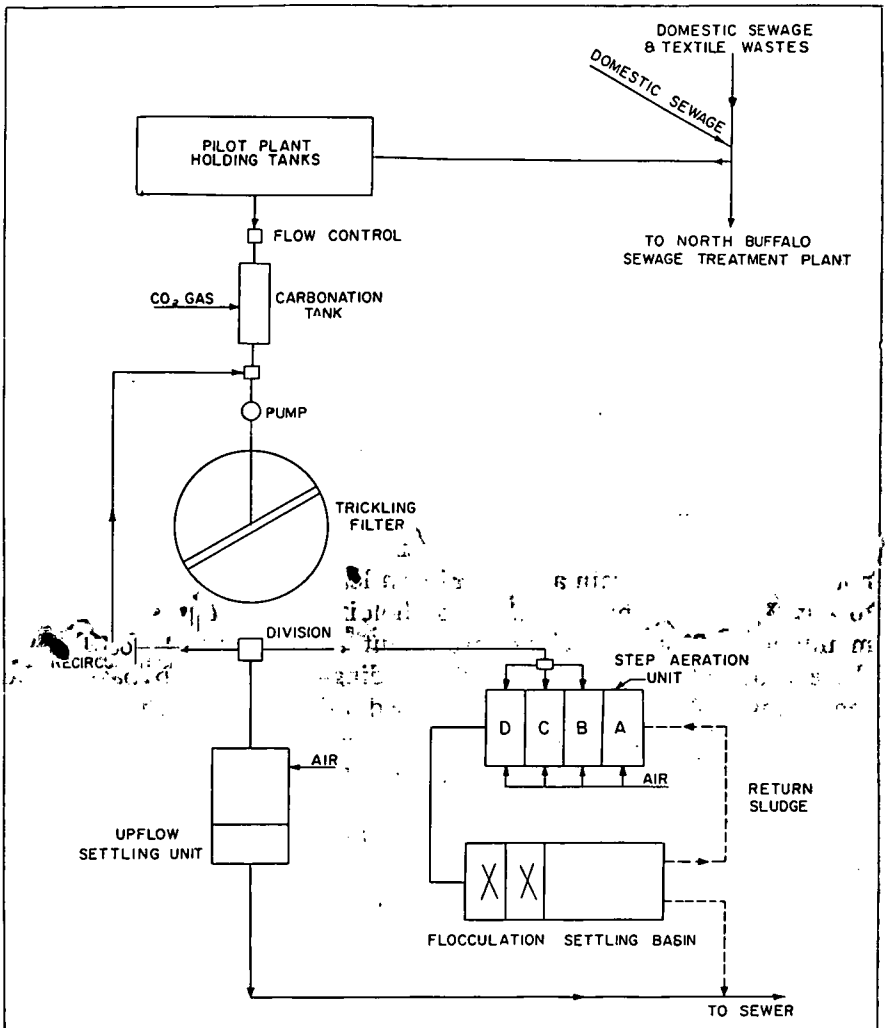

FIG. 5 FLOW SHEET WHEN TREATING DOMESTIC SEWAGE AND TEXTILE WASTES

time between the bubbles of carbon dioxide gas and the liquid comparable to the contact time obtainable in a full-scale carbonation tank. In the pilot plant this tank was merely used for the purpose of reducing the pH of the raw sewage to the point where it could be effectively treated by the trickling filter. The operation of the carbonation tank was controlled manually and adjusted according to the pH value of frequent samples of the effluent.

Near the end of the pilot plant test period carbonation was discontinued to determine the ability of the trickling filter to treat high pH wastes. The filter continued to function at pH values up to 11.5 but at reduced efficiency. Calculations showed that pH reduction by carbonation resulted in the lowest over-all cost of treatment.

Trickling Filter Performance

The trickling filter was operated with a 2 to 1 recirculation ratio at all flows. The hydraulic loading, including recirculation, varied from 7.5 mgad to 36 mgad. Since the BOD of the sewage-textile waste mixture was much more variable than domestic sewage alone, it was not possible to maintain a very uniform loading on the filter from day to day. However, by means of the holding tanks it was possible to maintain a constant loading throughout any 24-hr period. Toward the end of the pilot-plant tests the holding tanks were bypassed and the sewage-waste mixture was pumped directly from the sewer to the treatment process. There did not seem to be much difference in the efficiency of operation of the trickling filter using either method of applying the loading.

The performance of the trickling filter when treating the sewage-textile waste mixture is shown in Fig. 6. In this figure the filter loading in pounds of 5-day 20°C BOD applied per acre ft per day is plotted against the removal expressed in the same units. The loading varied from 1000 lbs/af/d to about 12,000 lbs/af/d. The heavy line represents the average removal for the entire period of testing. The average removal amounted to 58% which is 4% lower than the average removal when treating domestic sewage alone. The light lines represent the normal range of removal within which the filter operated. The filter efficiency on the whole varied from 76.5% to 43%, which was considerably greater than the variation experienced when treating domestic sewage.

Step-aeration Performance

Since the biological treatment processes are based on bacterial metabolism of the organic pollutants, the most illuminating method for measuring the absolute efficiency of the process is to relate the amount of organic matter consumed to the number of bacteria present, when it is possible to do so. Figure 7 is a plot of the lbs of 5-day BOD

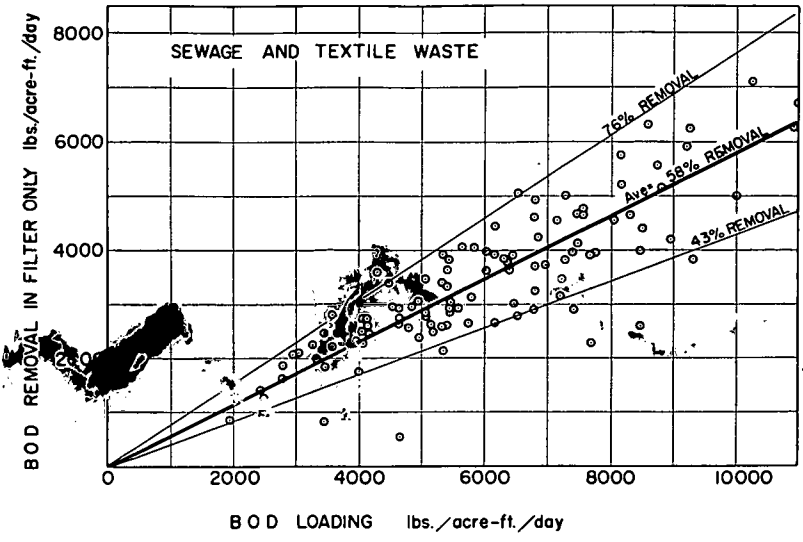

FIG. 6 TRICKLING FILTER PERFORMANCE

applied to the step-aeration process per lb of mixed liquor suspended solids versus the removals in the same units. It is assumed that the mixed liquor suspended solids concentration is proportional to the number of bacteria present.

The results have not been averaged because it was felt that an average would be meaningless in view of the variety of conditions under which the tests were conducted, for example, the three theoretical detention times of 7.2, 3.6, and 1.8 hrs during which the sludge was aerated. Lines indicating 100%, 90%, 80%, and 50% removal

are shown for the purpose of permitting a ready comparison to be made between the high and low loadings.

The loadings varied from about 0.12 lbs of BOD per day per lb of mixed liquor suspended solids to 3.2 lbs of BOD per day per lb of mixed liquor suspended solids. The actual loading achieved each day depended primarily on the concentration of mixed liquor sus-

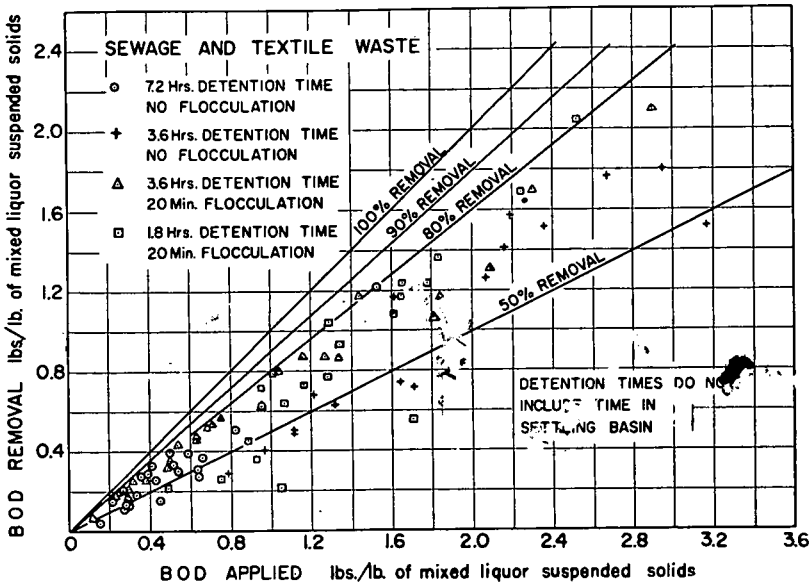

FIG. 7 STEP AERATOR PERFORMANCE

pended solids that it was possible to maintain. The theoretical detention times in the aeration compartment were regulated by adjusting the rate of flow or the size of the basins or both.

In general, the best removals were obtained when the loading was between 0.3 to 1.0 lbs of BOD per lb of mixed liquor suspended solids. Loading in this range corresponds to a Gould's sludge age of 1 to 3 days. Higher rates of loading tended to show a slight decrease in efficiency, but no marked decrease was observed as long as

the theoretical detention time in the aeration section was more than 2 hours. Aeration times less than this resulted in a somewhat lower efficiency at all loading rates. On the other hand, aeration times longer than 3.6 hours did not appear to increase the efficiency.

Flocculation of the aeration tank effluent prior to final settling had an important effect on the over-all removal. As shown on Fig. 7 by the crosses representing the removal without flocculation and the triangles representing removal with flocculation, the average improvement due to flocculation was 10% increasing the over-all removal of applied BOD from 57% to 67%. The overflow rate in the secondary settling basin varied from 220 gpd/sf to 660 gpd/sf. These results indicated the need in the full-scale plant for flocculation preceding final settling if the maximum possible efficiency was to be attained.

Upflow Settling Unit Performance

The results obtained in the upflow settling activated sludge unit are shown in Fig. 8. The results are plotted in the same manner as for the step-aeration process. In the upflow process a more uniform performance was observed. The efficiency of removal was generally better than 70% and did not fluctuate widely. However, the results show that when the aeration time was reduced to about 2 hrs the average efficiency fell sharply, dropping from better than 70% to about 40% when the aeration time was cut from about 4 hrs to 2 hrs.

The key to the superior performance of the upflow settling unit lies in the settling compartment. The upflow settling compartment combined a flocculation and settling device which automatically returned the activated sludge to the aeration compartment. However, because of the low overflow rates required for the light flocculent sludge (500-600 gpd/sf) it was found difficult to structurally adapt this unit to a large-scale activated sludge plant.

Sludge Production

The activated sludge units produced between 260 and 1,165 lbs (dry basis) of excess sludge per mg of sewage-waste feed. The average was about 500 lbs of excess sludge per mg. The quantity of excess sludge was thus about the same as might be expected from a high-rate activated sludge plant treating domestic sewage. It was, however, lower than anticipated for the high BOD waste being treated.

The actual quantity of excess activated sludge obtained could be varied over a considerable range by the manner in which the aeration basins were operated. If sludge withdrawals were frequent and large, a great deal of excess sludge could be obtained without reducing the mixed liquor suspended solids concentration appreciably. On the other hand if sludge withdrawal was limited, no rapid buildup

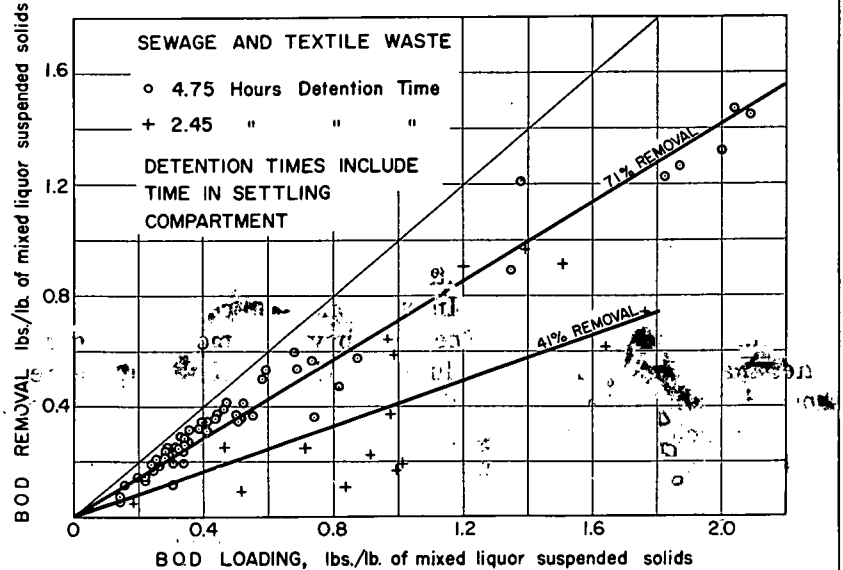

FIG. 8 UPFLOW AERATOR PERFORMANCE

of mixed liquor suspended solids would occur. The quantity of sludge withdrawn did not appear to affect the efficiency of removal of BOD from the waste water being treated.

The amount of sludge normally obtained indicated that there would be insufficient sludge to produce enough digester gas to operate the treatment plant. In view of this observation it was decided that it would be more economical to purchase power and reduce the sludge production together with the sludge handling and digestion to a mini-

mum. This then added support to the decision to eliminate primary sedimentation together with the sludge which would be produced in this unit. The final treatment plant will probably contain a small primary settling basin to remove gross solids and solids which might clog trickling filter distribution systems.

Sludge Digestion

The excess sludge had a volatile content of about 67% and a suspended solids concentration of about 0.5%. For economical digestion sludge thickening prior to digestion was indicated.

The excess sludge for the pilot plant digester was thickened to about 3% suspended solids by being allowed to settle in a 3-quart pail for several hours. 3,300 ml of the thickened sludge was then added to the pilot plant digester each day. This procedure resulted in an average detention time in the digester of 20 days. Since the contents of the digester were constantly being stirred, no supernatant withdrawal was possible. Digested sludge was first withdrawn and then raw sludge was added.

Digestion for 20 days reduced the volatile solids content from 67% to 61%. The gas produced averaged 13 cu ft per lb of volatile matter destroyed. The digested sludge had no unpleasant odors and was adaptable to vacuum dewatering after elutriation and the application of ferric chloride and lime in moderate amounts.

Lucite Column Tests

As previously mentioned, the carbonation tank in the pilot plant flow pattern was used merely for the purpose of reducing the pH of the influent sewage prior to treatment on the trickling filter. Pure carbon dioxide was used in this carbonation process. Our calculations show that only about 25% of the carbon dioxide applied in the carbonation tank was absorbed. The use of pure CO_2 in shallow basins is not economically attractive. Flue gas from an oil burner or diesel engine exhaust appeared to offer a favorable source of CO_2. In order to determine the efficiency that might be expected, in a full-scale treatment plant using carbonation basins 12 to 15 ft deep and employing flue gas which might contain from 6 to 10% carbon dioxide, the lucite column was used. The lucite column was equipped with a standard porous plate bottom (permeability of about 60) which produced gas bubbles having an average diameter of about 2.5 millimeters. The

rising velocity of these bubbles with respect to the lucite tube was about 15.9 centimeters per second.

The textile wastes-sewage mixture was added at the top of the column and withdrawn from the bottom. A mixture of air and carbon dioxide comparable to flue gas was admitted under the porous plate at the bottom and taken off through a sampling cock at the top of the column. The pH of the influent and effluent wastes was measured and the influent and effluent gas was analyzed for carbon dioxide content.

TABLE 3. RESULTS OF CARBONATION OF SEWAGE-TEXTILE WASTE MIXTURE

Test No.	Temp. °C.	pH of Waste		Gas Analyses % CO_2		% CO_2 Used	Gas Transfer Coefficient, K_1 cm/hr
		Influent	Effluent	Influent	Effluent		
2	24	10.5	9.5	6.3	0.8	87.5	28.9
2	24	10.3	9.5	3.3	0.3	91.0	54.5
2	24	10.3	8.9	7.5	0.8	89.5	44.7
2	24	10.5	[illegible].1	2.6	0.3	88.[illegible]	26.8

Table 3 gives the results of one of these tests. The gas transfer coefficient K_1 was derived from the following formula:

$$\frac{dw}{dt} = K_1 A\ (C_s - C_1)$$

In which

$\frac{dw}{dt}$ = rate of gas transfer

A = surface area of bubbles

C_s = mean saturation concentration of CO_2 in water

C_1 = mean concentration of CO_2 in sewage waste mixture (equals zero when pH of waste mixture is above about 8)

As may be seen from Table 3, about 90% of the carbon dioxide applied was utilized. This corresponds well with the efficiency of

utilization of carbon dioxide generally observed elsewhere in connection with the recarbonation of water in lime softening plants.

Similar studies were conducted to determine the rate of oxygen uptake by the activated sludge units. Activated sludge from the various aeration units was circulated by pump through the lucite column. Measured quantities of air were added through the porous plate bottom. The oxygen and carbon dioxide content of the influent and effluent air were measured. The average BOD removal over the period of each test was determined. Oxygen uptake in the upflow unit ranged from 16.4 to 50 mg/l per hour with an average of about 36 mg/l per hour. The first stage BOD removed in the upflow unit ranged from 23 to 65 mg/l per hour, with an average of 45 mg/l per hour. Thus, it appeared that about 80% of the BOD was being oxidized and about 20% was being used for sludge building. On five tests with the upflow unit the efficiency of oxygen absorption ranged from 3.3% to 8.1% with an average of 6.3%. Similar results were obtained with the step-aeration compartments. Little difference was observed in the efficiency of oxygen absorption from one compartment of the step-aeration to another. All were about the same and were approximately equal to that found for the upflow aeration unit.

The porous plate and the gastight cover of the lucite column could be removed and a picket fence stirring apparatus installed in their place. The column could then be used for measuring the rate of compaction of sludge. The column was filled to depths of 4, 6, 8, or 12 ft with excess activated sludge. With the picket fence stirrer rotating at about 1 rpm, the rate of settling and compaction could be followed for several hours. The settling and compaction studies indicated that shallow depths yielded the highest concentration of suspended solids in the shortest length of time. If the concentration period is prolonged too much, flotation of the sludge by the gas bubbles formed by biological activity occurs and reduces the efficiency of concentration. The results of the compaction studies in the lucite column indicate that with a basin about 4 ft deep there should be no difficulty in concentrating excess activated sludge from a suspended solids concentration of about 0.5% coming from the secondary settling basins to about 3.0% prior to discharge to the digestors. Slow stirring was of definite advantage in producing an adequately thickened sludge.

Color Removal

One of the most difficult problems to be solved in the treatment of the textile waste in Greensboro was that of color removal. The wastes contained large quantities of spent dyes, particularly indigo blue. These wastes result in a very unsightly appearance of the stream below the textile mills.

It must be admitted that this problem has not been completely solved. However, considerable reduction in color as the wastes pass through the various treatment processes were noted. The intensity of the color as measured by spectrophotometric methods indicate that about 40% of the color is removed in the trickling filter and about 67% in the activated sludge unit. The over-all plant removal was about 80%.

Conclusions

A partial list of the conclusions which may be drawn from the results of the pilot plant operation at Greensboro follows:

1. Mixtures of alkaline textile wastes and domestic sewage can be treated by conventional sewage treatment plant processes. A low effluent BOD concentration of about 50 mg/l can be maintained provided the pH of the plant influent is reduced below 9.5 prior to two-stage biological treatment.

2. Carbon dioxide derived from flue gas provides an efficient and feasible means of reducing the pH of alkaline wastes prior to biological treatment.

3. A trickling filter operated with a BOD loading of about 8,000 lbs/af/d and a 2:1 recirculation imparts a stability to the system tested and enables the following activated sludge process to function without undue upset. The trickling filter also is capable of adsorbing and reducing the shock effect of toxic wastes such as chrome dye wastes. However, the acceptance of chrome wastes into the sewerage system is not recommended.

4. The suspended solids in the mixed liquor of the activated sludge portion of the process are extremely slow to settle. Flocculation prior to final sedimentation is essential in order to insure a well-clarified effluent.

5. Color removal remains a partly-solved problem. Adsorption of colloidal color or biological flocs will remove about 80% of the indigo dye occurring in the textile wastes.

6. The sludge produced in the process is much too small to be used as a source of gas for power production which leads to the suggestion that the process be operated so as to produce a minimum quantity of sludge and thus reduce sludge handling.

ACKNOWLEDGMENTS

Many people have contributed to the work reported here. The pilot plant was designed by Hazen & Sawyer and Camp, Dresser & McKee, Consulting Engineers. Mr. James C. Pangle was the chemist in charge of the pilot plant and was responsible for its efficient operation. Mr. Thomas R. Camp and Mr. Richard Hazen were active in the design of the tests and in interpretation of the results. The writer was project engineer for Camp, Dresser & McKee. Mr. Hugh Medford, Director of Public Works, T. Z. Osborne, Assistant Director of Public Works, and Dan Holder, Superintendent of Sewage Treatment Plants, through their interest and cooperation, made the work go forward with the least possible difficulty. A great deal of credit is due to the pilot plant operators and technicians whose interested and faithful work produced the results reported here.

TOWN WHARF AT PROVINCETOWN, MASSACHUSETTS

By Paul S. Crandall,* *Member*

The new pier recently completed for the town of Provincetown is of a composite design, using treated timber piling as the foundation and underwater structure, and a reinforced concrete deck system, using both cast-in-place and precast concrete elements. This pier is essentially of light construction, since it is only intended to withstand the impact of 3000 ton excursion boats and fishing craft. It was designed using a flexible approach rather than a rigid one. As a result there are no batter piles in the structure. Resistance to lateral forces is accomplished entirely by cantilever bending of the piles, which are fixed both in the concrete at the upper extremity and in the hard sand and gravel at the lower extremity. Some bracing has been provided in the piles under the outermost shore section to provide some restraint against possible ice pressure, and in order to reduce the unsupported length of the deep water piles.

In order to provide maximum economy, creosoted yellow pine piles were chosen, since these could be obtained in the lengths desired. The cost of the piling was relatively low, compared to either steel or reinforced concrete, and the treated pile provided adequate strength, resistance to marine borer action, and the effect of freezing and thawing in the tidal range. Except for the deep water piles at the outer extremity of the pier, the inner piles are almost wholly exposed at low tide, so that marine borer attack is very unlikely, even with untreated piling. At high water these piles are entirely immersed in sea water, except for the upper few inches, which receive sufficient salt water saturation by wave action. This condition insures that the piles will be sufficiently saturated with salt so as to prevent any rotting of the wood.

The concrete deck system consists of heavy concrete caps four feet deep and two feet wide, with the timber pile heads imbedded twenty-four inches into these caps. The cap is well locked for moment resistance on the pile and provides protection against fresh

*Crandall Dry Dock Engineers, Inc., Cambridge, Mass.

water rotting of the pile heads. Also, the capacity of the pile is only limited to the strength of the pile as a column, with some fixity at both ends and full bearing capacity on the end grain at the tip of the pile.

Because of the very firm ground conditions, it was necessary to specify a depth of penetration of twelve to fifteen feet, so as to achieve adequate fixity into the ground. The driving was sufficiently hard to require that steel shoes be used on the piles, so that they would not be broomed at the tips. Although the driving was relatively hard, it was possible to obtain the required penetration.

Precast concrete stringers made of 4,500 lb. concrete, using standard reinforcement, was installed between the cast-in-place concrete caps. The caps were provided with pockets of a diamond shape, such that once the concrete was poured at the cap joint, the stringers would be locked in place against the longitudinal movement. The reinforcement of the stringers was designed for simple positive bending under dead load conditions and fixed end restraint for live load bending after the cast-in-place concrete slab was poured. By prefabricating the stringers in advance, it was possible to assemble the deck system very rapidly by means of a crawler crane traveling over the stringers. Also, the use of precast stringers permitted much more careful control of the concrete work, allowed defective stringers to be discarded, and reduced the amount of form work over water to that required for the caps and the deck slab. A 6½ inch reinforced concrete slab was poured over the caps and stringers, locking the entire deck system together so as to give fixity of the stringers over the supports and so as to tie the top chord of the caps in such a way as to provide maximum strength. The use of prestressed concrete for the stringers was not considered warranted in this case, since the construction was over salt water where corrosion of high strength wires might be troublesome, and where a condition of end fixity would develop, making it relatively troublesome to obtain the end fixity with prestressing. Also, it was considered that the chief economy in the stringer construction would be to have them precast, so that the assembly of the deck system could be done rapidly. In order to avoid any effect of freezing and thawing on the concrete, all concrete was kept out of water, except for what might be wetted by wave action in storms.

This pier is 1200 feet long, divided into several independent sec-

tions, with expansion joints between them. The outermost "T" section is separated from the remaining pier by an opening of more than six inches, so that the forces of impact against the section due to docking of excursion boats will not cause adjacent sections to be disturbed. A fender system on the outer face consisting of greenheart piles every twenty-four feet and intermediate oak piles has been provided. The greenheart piles, which project approximately twelve

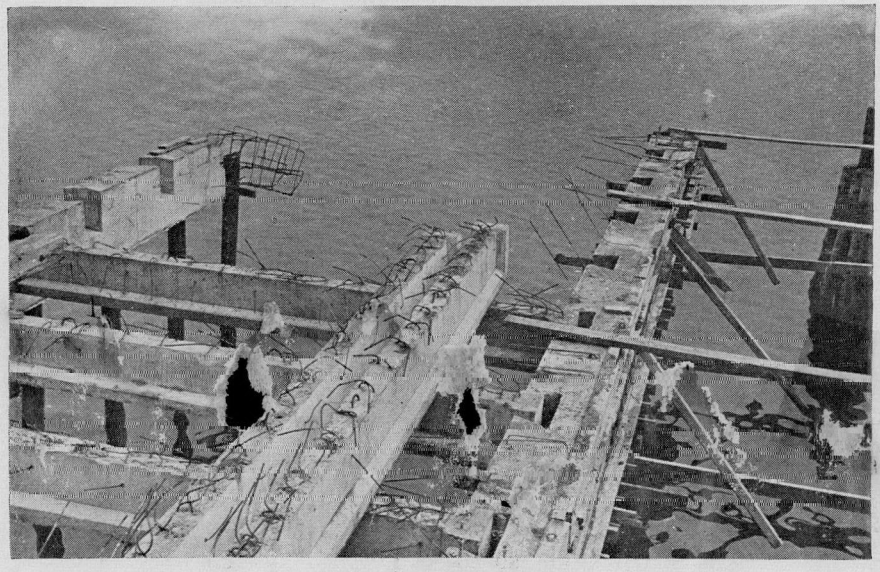

Detail of Stringers and Caps.

inches further out from the face of the pier than the oak piles, are provided with Goodyear Rubber Fenders, fitted between a timber waler and the concrete face of the pier. In this way, the full squeezing effect of the 3-foot long rubber cushion is developed by the timber waler bearing against the rubber. Greenheart piles were used because of their superior strength and abrasive properties, in addition to marine borer resistance, such that adequate resistance to impact is provided, regardless of the level of the tide and the height of fender guards on the vessels docking at the pier.

Unlike an ocean terminal, this pier is subject to having smaller craft, whose fenders are only a few feet above the water surface,

striking the fender piles almost at mid-height between the ground and the level of the deck. This subjects the piles to a large bending force and the greenheart being not only twice as strong as the oak piles, but with a modulus of elasticity of at least twice, can absorb consid-

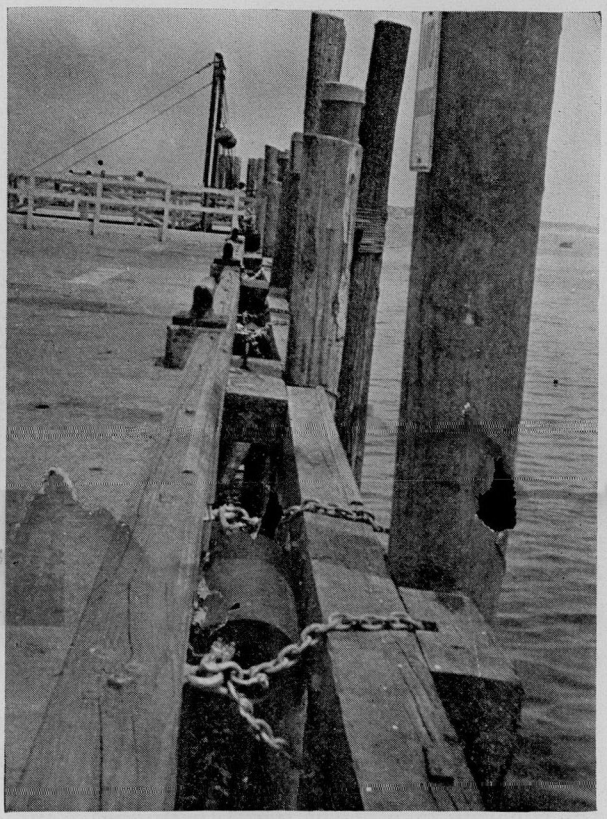

TYPICAL RUBBER FENDER NEAR GREENHEART FENDER PILE.

erably more energy for the same amount of movement. The greenheart piles also are quite resistant to lumnoria attack, and therefore should outlast any North American woods. The fender piles are so arranged that they can be replaced in case they are broken. In addition to the fender system, the entire outer section is free to move as fixed in cantilevers, such that the entire structural piling of the end section can be made to absorb energy of the vessel docking. This

feature is rather unique and can normally not be applied to ocean terminals where buildings and other facilities must exist on the pier. Difficulties in the past with dockings have caused the entire end of the old pier to be severely damaged. It was, therefore, felt that in order to provide maximum protection, it was essential that the entire outer end should be made flexible and energy absorbent. It was

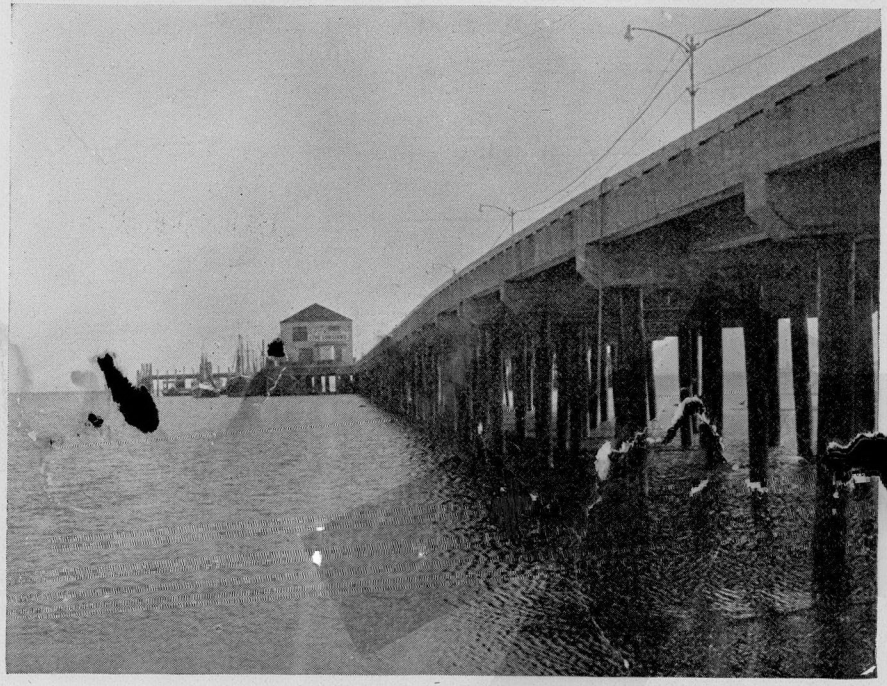

PIER SEEN FROM INSHORE AT LOW TIDE.

extremely important to keep the cost of the pier as low as possible and yet to provide a structure that would be durable and adequate for the purpose.

The composite treated timber pile foundation and concrete deck structure appeared to give the best promise of low first cost, low maintenance, and reasonably long life expectancy.

The cost of this pier which has 57,000 square feet of deck area and a two-story building measuring 174 feet by 42 feet for fish handling was approximately $600,000.

The designs were made by Crandall Dry Dock Engineers, Inc. struction materials, each to suit the various types of exposure to which a pier in salt water is subjected.

ACKNOWLEDGMENTS

The designs were made by Crandall Dry Dock Engineers, Inc. for the Waterways Division of the Commonwealth of Massachusetts. The general contractor was Westcott Construction Company.

CONSULTANTS, CLIENTS, AND CONTRACTORS*

Discussion

By C. P. Dunn†

Dr. Terzaghi's account of some of his personal experiences is extremely well written. There are no unnecessary words. There is a worth-while thought in every line. Therefore, the paper is recommended as something which deserves to be read carefully, more than once.

The writer of this discussion classifies himself as being a client, and also a contractor, and, therefore, has frequent contact with consultants, and has some measure of appreciation of their problems. It is along these lines that he will attempt to add some worthwhile discussions.

1. When a man reaches the status of having attained the title of "Consultant" whether he asked for it or assumed it without asking anybody, or just naturally grew into it, the title carries with it most certainly and, at the very least, the modest definition given by Dr. Terzaghi, "A Consultant is a person who is supposed to know more about a subject under consideration than his client". All too often, the client feels that the term "Consultant" designates a person who is endowed with supernatural powers—who can do no wrong and who can make no mistakes. In such cases, the consultant should make an effort to clear up the situation.

2. It has been the writer's experience that the most highly respected and well liked consultants are those who take the trouble to explain each step in their analysis of a problem, and give a clear and complete account of their reasoning behind a decision. This procedure of stripping the mystery from a thing often causes the client to feel—"It's so simple, why didn't I think of that myself?" If he feels that way, it is a good healthy situation, and that client will come to that consultant again and again.

3. Consultants are many times asked to serve in groups, called "Boards". The writer has no quarrel with that procedure; it is

*Paper printed in January, 1958 Journal, by Dr. Karl Terzaghi.
†Vice President, Morrison-Knudson Company, San Francisco, Cal.

necessary in many cases, but a bit of comment on the way Boards function may be worthwhile:

(a) If the client has simply employed say three consulting engineers, and has told them "Gentlemen, you are my Consulting Board, so please give me a written report answering these questions which I now hand you", he is likely to be unhappy with the result for several reasons: such as, if no one has been designated as Chairman, there may be some lost motion and lost time during a period of adjustment within the Board before one of them emerges as the leader; if the client limits the functioning of his Board to specific questions which he asks, he may miss some very important items. It is well if the client, in selecting a Board, gives some thought to whether he is assembling a group which will contain clashing personalities.

4. A Consulting Board, functioning as a body and making a unanimous recommendation, is likely to come up with the most conservative of the recommendations made by any individual on the Board.

5. There can be no compromise with safety. That must be understood by all concerned. However, there are many situations where an owner can and should take "calculated risks", such as making a choice between immediate high investment with low maintenance costs, and a lesser first cost with high maintenance costs. In situations where calculated risks are proper, the client should frankly discuss the problems with his consultants and ask them to help him in evaluating the risks.

6. Dr. Terzaghi has very ably discussed several situations where a Consultant can become a "scapegoat". In the writer's opinion, this happens most frequently, with consultants the victim, when they are asked to arrive at decisions based on incomplete information. We might say it this way—"A Consultant can be compared to a modern electronic computing machine; the answers that come out of him can be no more reliable than the data you feed into him".

7. The writer is a strong believer in the desirability of a consultant being attached to a job from the very beginning of a design to the very end of construction. The client who waits until he is in

trouble before calling a consultant is likely to experience trouble of greater magnitude than necessary, and is more likely to stay in trouble than would be the case if he called on the doctor while he was still in good health.

8. A Consultant, to be most useful, must have the courage to say unpleasant things, at times, when necessary. The client is not looking for a "yes man" when he selects a consultant; he is in need of sound advice (even though he may not always follow it).

9. There are some clients who, feeling timid about a special problem, employ a specialist consultant and get his opinion, and then develop courage to the point of ignoring the consultant's advice. The writer has heard this situation expressed in this way: "It's a great comfort to have some advice to ignore—much more satisfactory than not having any advice at all".

In closing this discussion, the writer wishes to again express his sincere admiration for Dr. Terzaghi's paper, and to recommend a second and a third reading.

Discussion

By F. E. Schmitt

Dr. Terzaghi's noteworthy review of some of his experiences in the birth period of modern applied soil mechanics or earthwork engineering, which forms the first half of his paper, points out certain major problems of construction work involving soils, especially soils whose nature and future service behavior are not well known. He indicates clearly how such problems may (and should) be dealt with. Three steps are required on the part of the owner and his engineer: (1) to recognize the new conditions or difficulties of the projected undertaking; (2) to realize that neither party knows enough about these conditions to be certain of success in dealing with them; and (3) to enlist the cooperation of a consultant who does know and who through past experience or suitable investigation or both can apply the measures necessary for sound construction.

The new science and art of earthwork engineering was in the very process of being born when Dr. Terzaghi entered consulting practice. Fortunately, the initial application of his classic studies of friction in sands and load consolidation in clays was successful, demonstrating

brilliantly the importance of the studies. Fortunately, too, this instant success stimulated extension of the studies to other phases of the mechanics of soils and to the behavior of mixed and special soils and their structural changes. Yet in view of the great complexity of the materials and phenomena it is not surprising that after nearly forty years of diligent work by a host of able investigators neither the science nor the art of soil mechanics and earthwork engineering can be said to approach maturity. This is even more readily understood in the light of the fact that the practical range of soils in their engineering aspect extends from near-liquid slurries to sands, gravel and talus on the one hand and to both plastic and brittle rock on the other, and that each of these types of material is subject to complex physical, chemical and geologic influences.

It is apparent that such diversity dictates utmost care in the study and utilization of any specific soil for specific service in construction, and that the fullest available stock of experience and study should be drawn upon. Particularly is this true in a region of relatively young soils such as the Great Plains, where water and wind deposition have been active, on materials of widest range of origin, from stream and glacial erosion products to volcanic flows and dusts. The successful execution of great numbers of important structural and hydraulic works in that region, accomplished largely without the aid of soil consultants, reflects the acquired judgment and skill of engineers and builders, developed in local practice. Today, soil mechanics plays an ever larger part in shaping design and construction procedure there.

The record and analysis of experiences presented in the paper serves to emphasize a further problem of construction practice, one not necessarily involving soil mechanics. This is the importance of establishing effective correlation of the required construction knowledge and skill with responsibility and authority, to the end of assuring that the objectives of the undertaking will be fully realized. Such correlation is not always attained under the prevailing practice of modern times, when large construction projects as commonly organized involve a separation of some or all of the functions of planning, exploration, test, design, and the direction of construction.

The separate participants in the project usually function in more or less independent manner, and may not speak the same technical language or have equally sensitive understanding of potentially serious

changes in conditions. The designers may even be unfamiliar with the site, or they may be unable to interpret the full significance of the field investigations. The construction men may fail to appreciate the usefulness or necessity of some design or specification element, and may not foresee the effect of field design changes or of possible departures from those field conditions to which the design was adapted. It is difficult to obtain ideal results under such relations within a group of men that is expected to cooperate to a joint purpose.

Similar problems of coordination and cooperation turned up in past ages, as soon as humanity embarked on the novel adventure of erecting tall edifices. Therefore, an adequate solution had to be found at an early date. It consisted in placing each major project under the authoritative and responsible direction of a master builder, skilled in the details as well as the principles of the arts involved. Without this organizational device the great cathedrals, halls and aqueducts of bygone ages could not have been built.

During the last century engineering science and the techniques of construction have made amazing progress, but corresponding development of the organizational aspects of engineering has lagged. Some of the consequences may be inferred from the construction and service experiences cited by the author. In consideration of these and many other items it may perhaps be timely to turn back the pages and recall how our forefathers maintained adequate cooperation between the numerous arts involved in the execution of their engineering masterpieces.

Discussion

By Adolph J. Ackerman*

Dr. Terzaghi's services as an educator and his skillful writings in the technical field have had far-reaching effects on the engineering profession. It is, therefore, all the more stimulating to gain a glimpse of his personal philosophy as it has developed from his consulting engineering practice.

Among the items in his paper which deserve special emphasis are the following:

1. A prerequisite of a successful consulting engineer is the requirement that he must have "independence" and "time to think".

*Consulting Engineer, Madison, Wisconsin.

He must be in a position to say "No" when that is the correct answer to a proposal. He must also be willing and eager to spend a substantial part of his time on study and on his continuing professional development without receiving immediate financial compensation.

2. "Competence" is an essential qualification and, as Dr. Terzaghi has pointed out, some of his most valuable and useful services have grown out of casual observations made while inspecting a construction site for some other stated purpose.

3. "Confidence" must be developed in the judgment of a consulting engineer. This invariably can only come from first hand experiences and contacts, where successful results speak for themselves. In this respect Dr. Terzaghi's career is unique; he has developed the new science of soil mechanics and has helped to bring it to maturity by means of practical applications to problems in foundations. In some cases such problems had gravitated in the hands of others to a point of distress, and Dr. Terzaghi's ability in working out economical corrective measures has produced, in the minds of such clients, a high degree of mutual confidence.

4. "Participation in the planning and execution of a project" provides a maximum of opportunity to render useful service. In this respect the employment of consulting engineering services seems to suffer unduly from unwise habit. (Perhaps the common habit of employing a physician only when there is illness and need for a cure, carries over into the employment of consulting engineers; the idea of retaining a physician on a continuing basis, to keep a patient well, is used only seldomly.) A consulting engineer can contribute his greatest usefulness if his capabilities are employed at the planning stage and, later on, for keeping a project going well (or for keeping it out of trouble). Unfortunately, such services tend to remove a yardstick for measuring their effectiveness. A client will recognize the value of specialized services more readily when he is in trouble and when he foresees a loss from which he is saved by calling on the assistance of an experienced consulting engineer. It is not easy to demonstrate the need for competent advice before there is trouble, and its greater value.

5. "Skillful relationships" with a client's organization are of major importance. A competent consulting engineer who works directly with a chief engineer, vice-president or president, at a level where there is mutual respect and confidence, has very little difficulty

in rendering valuable services. However, as Dr. Terzaghi points out, difficulties sometimes arise in attempting to maintain good relations with a "massive organization". There may be lack of understanding regarding the importance of the consulting engineer's participation, and difficulty in identifying his contributions and those made by individual members of the organization. A successful relationship can be maintained only if the top executive of the organization sees to it that his confidence in the consulting engineer is respected by the organization. Under such circumstances a continuing relationship is most likely to lead to superior performance on the part of the entire organization.

6. A clear "definition of the consulting engineer's responsibilities" is a prerequisite to successful services. His authority and responsibility may range anywhere from zero to 100 per cent, or, as Dr. Terzaghi has indicated, he can be anything from a "scape-goat" to a "savior". Unfortunately the concept of a consulting engineer serving as "window-dressing" is all too common; occasionally a well-intentioned beginning gravitates to this type of relationship simply because there was no satisfactory definition at the start. The consulting engineer is under some handcap in developing a statement of procedures and relationship with respect to someone else's organization. It is therefore advisable that the client, or the executive in charge, take the initiative in communicating proper definitions of relationships to his organization, once they have been agreed upon with the consulting engineer. On the other hand, a competent consulting engineer insists on knowing in advance what he may be getting into, or what may be expected of him, before he commits his services. If more of this were practiced, it would help to raise the level of performance of the consulting engineering profession.

It is hoped that Dr. Terzaghi's stimulating paper will lead to a further effort, on the part of consulting engineers, to create definitions for various types of services, along with definitions of responsibility and authority. These could readily become standards of reference in connection with the engagement of consulting services.

Discussion

By Henry Grace*

The difficulties described by Professor Terzaghi indicate that there is something radically wrong with many of the engineering organizations operating today.

The writer has spent most of the last twenty-five years working with consulting engineers, initially as an assistant engineer and laterly, as a partner employing his own staff to carry out the works entrusted to his firm. He has at times acted as a consultant to other consulting engineers and at times his firm has employed consultants to advise him on difficult aspects of the work. He has, therefore, had the opportunity of viewing the client-consultant relationship in both directions. In his experience this relationship has usually been a happy one, resulting from the mutual understanding between the client and the consultant. In all cases the consultant has been directly responsible to the Engineer who controlled all aspects of the work. According to British practice "The Engineer" is the individual who is responsible to the owners for the execution of the work. Both legally and in practice he is responsible for formulating the original proposal preparing the designs and specifications and supervising the construction of the work, which in most cases is carried out by Contract. Under the Contract "The Engineer" is given very wide powers to ensure that the work is carried out to his entire satisfaction. He can require unsatisfactory work to be replaced, unsatisfactory members of the contractor's staff can be removed and in extreme cases he can expel the Contractors from the site. If, therefore, the consultant has confidence in "The Engineer" responsible for the project he should experience little or no difficulty.

For short periods the writer has worked for larger organizations. These organizations are usually run by Governments or groups of businessmen or financiers who have little interest in the technical aspects of engineering. The organization is usually divided into a number of departments with little or no liaison between them. "The Engineer" defined in the Contracts prepared by these organizations is someone who acts primarily as an administrator. He has very little detailed knowledge of the job he is responsible for controlling, because the volume of work handled by his organization is too great

*Wilson, Kirkpatrick & Partners, 47 Victoria Street, London SWI, England.

for him personally to exercise any detailed control. Such organizations can carry out routine engineering works. Engineering works which require skill and judgement of a high order cannot in the writer's opinion be carried through successfully without the control and guidance of "The Engineer". It is this type of engineering work which usually calls for the services of a consultant. In the writer's opinion the consultant would be well advised to turn down the assignment unless he is satisfied that he will be directly responsible to "The Engineer" who performs the functions previously described and who has a knowledge and appreciation of the aspects on which the Consultant is asked to advise.

Discussion

By H. J. B. Harding*

Dr. Terzaghi's paper is full of wit and wisdom, and exposes an area not often explored in technical literature.

Civil Engineering in Great Britain has developed on rather different lines from European practice, and in some ways from that of the United States. The independent consultant is rare in Great Britain, where the established firms of Consulting Engineers have existed and developed for many years. In the days of private enterprise they were all-powerful in the profession, but their power has been somewhat diminished by the great increase in nationalized industries and Government and Local Government departments. They still cover a wide field due to the increased complexity of engineering.

The partners and senior staff of such firms will probably agree somewhat wrily with Dr. Terzaghi's introduction. Such an established firm has the advantage of stored experience, which is available as long as its filing system is efficient.

The independent consultant can give good service if he is not pressed with too many simultaneous enquiries and has time for undisturbed consideration of the problems. It is also true that an independent consultant spends half his time on occupations described by the author which cannot be allocated to any particular client. Although he has no partner to share his responsibility, he has the

*Consulting Engineer, London.

compensation of only having to explain any personal difficulties to himself.

In Great Britain independent consultants are often professors in engineering colleges who undertake consultation and research in order to widen their field and improve the value of their teaching.

The relation between client and consultant is set out in a most interesting way. A consultant will find himself a more popular figure when he is called in after trouble has arisen than in the early stages when his warnings may be unwelcome in the prevailing atmosphere. In spite of training schemes most people learn only by bitter experience.

Some years ago I was detailed to introduce several geotechnical processes into Great Britain, and so met many consulting engineers and contractors to discuss possible application of processes to their problems. This brought experience which would never have been gained by merely carrying out one project after another in the same organisation, and led to discussions on other problems which had arisen. To one's surprise, one found oneself being asked for and giving opinions to older men on various other aspects of their problems. Some who had got into trouble were looking for a quick cure, and tried to persuade themselves and the writer that some particular process would immediately solve their difficulties. This led me to say later at a meeting of the Institution of Civil Engineers that "Among Civil Engineers wishful thinking amounts to an occupational disease".

Sometimes, when precautions have been taken and all has gone well, people forget the risks which were possible and consider that the approach was over-cautious. In the British tunnel world in which I was trained, my generation was the third after Greathead, and was taught to take certain precautions which our seniors had learned from the pioneer first generation as being good practice, so we did not have experience of collapses and runs of soil. The fourth generation, and firms which came in later with less experience, began to deride this school of thought, and took to using lighter timbers and riskier methods. The writer then had the experience of being called in after trouble had arisen, and had the opportunity to study the effects and appearance of collapse in the work of others, which he might never have encountered in his own work.

Dr. Terzaghi's remarks on the consequences of casual observations are worth noting. There is no doubt that a detached trained

mind notices unsuspected aspects which can be overlooked by those engrossed in the problem. The internal pressure from personalities, and the urge to get on with the work without having to re-design or reconstruct often impairs the vision. A sound training in the basic sciences may improve the mind, but does not necessarily alter psychology.

The difference in approach between inside and outside departments is well described in the paper, and is fundamental. Even when engineers are interchanged they are apt to develop into "inside" or "outside" personalities.

The author's success is founded on early intensive practical experience. I was fortunate enough, for all too brief a period, to be in attendance on him while he was collecting information on several different suggestions for dealing with a difficult problem by rival geotechnical processes. His approach was completely detached and unprejudiced. He started from fundamental beginnings and moved forward by a series of logical questions and reasonings, which was an object lesson in how to arrive at a balanced opinion.

The single-handed consultant has the advantage that each problem solved brings him fresh personal experience, which, from the nature of his work, accumulates more quickly than the experience of men who spend years in actually completing each project, but such a position, which can only be reached after accumulated experience, requires moral courage as well as tact and personality to back a personal opinion based on information which of necessity must often be provided by others. The author has also set us an example of how to approach problems with the humility which difficult soil conditions demand, until sufficient evidence has been collected to enable good deductions to be made.

Another experience of the independent consultant is that senior men are often glad to discuss their problems with someone outside their own organization. This is not necessarily to obtain advice, but for reassurance that their own reasoning is correct. Here the independent consultant of wide experience can often provide that reassurance by being able to cite parallel cases. His contribution is then welcome, even if it is not making any addition to decisions which have been arrived at.

Dr. Terzaghi's evolution through intensive practical experience into a single-handed consultant has resulted in his becoming a form

of civil engineering Sherlock Holmes. He has unfortunately had no permanent Dr. Watson to record his exploits, so we must be grateful for such examples as he gives in this paper of the problems which he has faced and the solutions which he has propounded.

More can be learned from actual examples than from reading generalized statements. It would be useful if a symposium could be made of the various cases which the author describes, not only in this paper, but in selections from his other writings, in order that such a wide range of cautionary examples should be available to Civil Engineers of all ages.

If Dr. Terzaghi had not been a great engineer he would certainly have made a great detective.

Discussion

By G. L. McKenzie* and R. Peterson**

The excellent paper by Professor Terzaghi entitled "Consultants, Clients and Contractors" is very timely because many engineers with training in soil mechanics who are now going into consulting practice will certainly encounter the problems outlined. Although the majority of these men will no doubt be well qualified technically, they may not be adequately prepared to deal with clients and contractors. It is for this reason that the sound advice based on Professor Terzaghi's wide experience is most valuable.

One of the main points of the paper is that the soils consultant should be retained throughout the project until the completion of construction. This is imperative if the client is to get the maximum benefit from these specialized services.

It is also highly desirable that the soils consultant be associated with the job from the very early stages. If this is not done, and it is the intention to present the designs for approval just prior to construction, the client may find himself in an embarrassing situation. For example, in the case of an earth dam the consultant might recommend that a different type of dam at a nearby location, where no sampling had been carried out, would be the best solution. Firms are somewhat hesitant to call in a consultant in the early stages before a definite plan has been formulated, as their proposals are often vague

*Director, Prairie Farm Rehabilitation Administration, Regina, Saskatchewan.
**Chief Soil Mechanics and Materials Engineer, P.F.R.A., Saskatoon, Saskatchewan.

and not shown on plans. The consultant will be more than pleased to accept these shortcomings in the early stages in order to have some assurance that investigational work will be carried on to provide the most useful information, rather than design studies which he feels are not particularly pertinent.

The desirability of contact with the project through construction is becoming increasingly important with the tendency on major and difficult earth work to modify the design as the job proceeds. This makes it possible to utilize the more accurate soils information revealed by excavations and also the observations which are generally taken during construction. As pointed out by Professor Terzaghi, there is a considerable difference between the necessity for such continuity in the fields of structural engineering and soils engineering. There is an old adage which states that a poorly designed dam well built may be far superior to a well designed dam poorly built. It is therefore obvious that if a consultant is required at all, it would be in the interests of those concerned to have him associated with the project from its inception to its completion.

Professor Terzaghi has emphasized the importance of contact between the design and construction departments in earthwork and foundation engineering. In the Private Farm Rehabilitation Administration we have found that good liaison between survey and investigation, design, and construction can be accomplished by having an engineering board composed of representatives of all three functions. This board should function during the entire period of design and construction and should inspect the project regularly during construction.

Our policy for years has been to have all features of the design of dams pertaining to or affected by the foundations and the materials to be used in construction originate in the Soil Mechanics Section. When construction is under way that section is required to maintain a thoroughly qualified soils mechanics engineer on the project at all times. He functions administratively under the Construction Engineer and functionally under the direction of the Senior Soils Mechanics Engineer. We have found from experience that this procedure works satisfactorily and the Construction Engineer finds it relieves him of tremendous responsibility. One important qualification is that the soil specialist must be a practical man and recognize the fact that textbook examples rarely occur in practice. Decisions must often be made on the site without recourse to consultants or senior officers.

Discussion

By Jacob Feld*

This paper is of extreme interest since very seldom does a man of Dr. Terzaghi's experience outline his approach to his clients as individuals and as sources of a livelihood. It was especially valuable that this lecture was given at a Student Night meeting when the younger men could probably be influenced in their future professional careers and approach this very serious problem of when and how to go into private practice. It is a big step to leave the security of employment in engineering to that of consultant private practice. However, it is a step not taken by enough men and the writer has talked to a number of student and junior engineer groups urging them to make the step as is done by so much larger a percentage of professional people in the fields of medicine, law and accountancy.

After all, the purpose of the consultant in any professional field is very similar to the work of a teacher. He must give instruction to those who cannot procure it for themselves. However, he differs from a teacher in that his instruction concerns a specific problem and shows the solution thereof or else prepares a diagnosis of causes resulting from unknown conditions. Just as a teacher is not a school, so a consultant is not an engineering organization, but a personal entity. That distinguishes him from an engineering firm doing all kinds of work.

Basically, just as a teacher must know what he teaches and also must know how to teach, a consultant must have background and experience for the specific problem which he tries to solve and must be able to explain the solution to his clients. That client may be a technical organization and therefore, he explains in technical terms. That client may be a layman and he must translate his technical solution into words which can be understood by a layman. Otherwise, his services are of no value. A designing engineer can prepare a drawing and that drawing is understandable in all languages. Graphical presentations of a consultant's explanation are of value but only as illustrations of his description in words.

It is really strange how small incidents lead to an engineer becoming a consultant. Dr. Terzaghi's explanation is an interesting one. The writer himself went into consulting practice at what is considered in engineering a very young age. The reason for it was that as assist-

*Consulting Engineer, 60 East 23rd Street, New York 10, N. Y.

ant to the chief engineer of a construction company, he had been loaned out to a consulting firm to study and design a special problem. Finding that his knowledge of this special problem was sufficient to provide an economical solution and that this rather large engineering office did not have access to such knowledge resulted in a decision to put out his shingle and open an office. Chances are that just as it is easier for a young man to dive into cold water, it is easier economically, for a young man to enter consulting practice. Of course, he cannot expect, because of lack of background and experience, to undertake the more serious problems, but there are a great number of rather simple problems in engineering work which require study and solution. These problems are in the offices of the contractors, the architects, the banking and finance companies and quite often, in the municipal and other governmental agencies. It is not difficult at all to build up a reputation among these groups to get as much work as one can or should handle. It is most important very early in the consultant's practice to learn a very important word, and that is the word "no". It is not necessary that every question that comes in be accepted as a commission. It is best that some, and probably a good many, be refused. In that way, as Dr. Terzaghi says in his introduction, one can avoid stomach ulcers.

It is also not essential that a consultant be always in the same rut. If he continues his education after graduation, as Dr. Terzaghi so wisely recommends, and never stops his education, there is no reason why his reputation cannot transcend more than one specialty as defined in college curricula. Basically, the fundamentals of most of the problems are the same scientific facts and solutions in many apparently unrelated fields stem from the same logical procedures based upon these facts. The consultant will find it necessary to be able to handle men on the job during his field inspections of conditions known or unknown and learn how to collect the facts without hurting personal pride and endangering the jobs of men from whom he must get the information. After all, some of the troubles which a consultant must diagnose are the results of someone making an error and at the same time, a consultant must be ready to admit that the people whom he contacts do know something and sometimes more than he does.

In the field of "construction incidents", an expression used in some European countries as a translation of the more common word "failures", one of the greatest difficulties is to find what the legal profession calls the "proximate" cause. It is a combination of many

conditions and many deviations from safe and proper procedure. Yet in the common law it is necessary to blame a single item that is known as the proximate cause. It is one of the difficulties in expert testimony for a consultant who is being pinned down and cross-examined on this question of what caused it and what did not contribute to the incident. The consultant in this type of work must be scrupulously honest. If there is not proof that a single cause existed, there is no reduction in the value of his services to honestly say so.

The problem of how to treat a client soon becomes an important question. Some consulting officers, usually the larger groups of several partners and associates, find it necessary to maintain as either associates or employees men who, although graduate engineers, are really politicians. Possibly these men have previous background and experience in related fields, but their purpose is to get work and collect for it. Smaller organizations, fortunately, do not need such help but a small or individual consultant should be warned to have no connection with what in Washington has been known as the "Five Percenters" group. If he cannot get the work on his own reputation, he'd better do a little more studying and get a better reputation or else leave the field.

The writer feels complete accord with Dr. Terzaghi in the over-all approach and [illegible] if one is not interested in becoming [illegible] firm in the [illegible] the future owner of the most pretentious mausoleum in the cemetery, the field of consulting engineering can be sufficiently remunerative to permit comfortable living and sufficiently rewarding to permit a good life.

Discussion

By R. M. Hardy*

It is a refreshing change to have one with the status of Dr. Terzaghi so forthrightly place the practise of the "art of engineering" on at least an equal basis with executive management as an ultimate goal for professional achievement. It is also of interest to note the emphasis he places on the necessity for research and digest of observational data by an engineer who would aspire to superior knowledge in a particular field. By implication it follows that, contrary to opinions so widely held, experience in engineering work is by itself no guarantee of a high degree of professional competence.

*Dean of Engineering, University of Alberta, Canada.

There is one aspect of the relationship between consultants, clients and contractors that is worthy of attention, which perhaps is somewhat beyond the immediate interests of the student audience to which Dr. Terzaghi's comments were directed. The specific problem and some of its consequences will be best stated by two examples.

In the first case competitive bids were invited for the construction of some six miles of tunnel through rock. The contract provided for payment at a unit price per foot of tunnel with additional unit prices for lining and grouting where required. The description of the underground conditions was included in the specifications in five sentences totalling about one hundred words. It was based on a preliminary geological examination and defined the rock type in the mountain; the fact that faults would be encountered, but that their nature and frequency could not be predicted; and that a major shear zone would be crossed, but no undue tunnelling difficulties were to be expected. The specifications further stated that if the underground conditions encountered differed from those described no extra payment would be made to the contractor.

As the work progressed the underground conditions were found to vary widely from those predicted in the specifications. The job records reported blocky and badly broken rock, squeezing and heavy ground, mud seams, numerous shear zones and water in quantities up to 10 cfs. Two most undesirable consequences resulted from the form of the contract documents and the gross variation in actual underground conditions as compared to those predicted. The first was that the conflict of financial interest created between the owner and the contractor resulted in the work progressing without the benefit of adequate engineering advice, which the conditions encountered so badly needed. Second, the eventual adjustment of payment for the work, despite the terms of the contract, resulted in loss to the owner of the advantages he anticipated in inviting competitive tenders for the work.

In the second case bids were invited for the construction of a canal. The investigations of the subsoil conditions at the site were extraordinarily complete. The results were made available to the bidders along with a statement to the effect that the information was essential to the proper prosecution of the work. However the subsoil data were not made a part of the contract documents, and these went to some length in asserting that the owners took no responsibility for

the accuracy of their engineering data and that the contractor assumed full responsibility for completion of the work at his bid prices irrespective of the conditions encountered.

The job involved the excavation of a considerable yardage of glacial till which the subsoil data classified as being dense but non-cohesive. However, as the job progressed experience showed that much of the glacial till was highly cemented and that it could not be excavated by equipment usually used for "common excavation". It had to be quarried. Again, in this case, eventual adjustment of payment for the work resulted in the owner losing much of the advantages to him of competitive tenders for the work.

These two cases have the common factor that the contract documents attempted to make the contractor financially responsible for errors in judgment or even inadequate engineering on the part of the owners' engineering advisors. The inclusion of such clauses in contracts and specifications may be dictated by the legal advisors to the owners, and therefore the engineers concerned may have no say in the matter. Moreover there is good reason to make a contractor financially responsible for any risk on the job which can properly be insured against, the cost of such protection becoming a part of the cost of the work. However the ethical position of the professional engineer is surely not too strong if he becomes a party to procedures which place the financial responsibility for engineering deficiencies on the contractor. Moreover the interests of the client, in the great majority of such cases, are not properly protected and the adequacy of the engineering may be jeopardized. It is perhaps time that some attention was given by professional engineers to the formulation of a more equitable policy concerning responsibility in such circumstances.

Discussion

By Norman D. Lea*

The author, as is his practice when writing technically, has chosen a timely topic and made an outstanding contribution. In this paper he has also given the readers an illuminating glimpse into his own character and personal philosophy.

The author has defined a consultant as a person. This clarity

*Vice President, Foundation of Canada Engineering Corporation Limited.

is commendable and much needed in the engineering profession where the strange practice has developed of referring to engineering design firms as consulting firms. Many engineering activities are best done by a team, but consulting is basically an individual activity. It is true that sometimes boards of consultants are used. In medicine, it is common for doctors to be called in for consultation. It is important to note, however, that in both these instances each individual consultant's opinion is considered on its own merits. When the chairman of a consulting board is a wise administrator, he weighs each consultant's opinion in the light of the consultant's experience, training and reputation before reaching a decision.

The efficient design and execution of the complex engineering assignments now facing our profession requires organization—often into large and complex companies. Most engineering is now being done either by such independent companies or by similarly organized engineering departments within even larger corporations or agencies. Many individual specialists within these organizations perform internally the functions of a consultant. They too are faced with some of the problems described by the author. Engineering organizations do not normally have internally all of the specialized knowledge they require and thus they may be expected to employ outside consultants whenever this will benefit a particular project.

From the author's extensive experience with engineering organizations, he has been able to point out four important shortcomings, namely:

(1) *Compartmentalized Organization.* Organization into departments for surveys, design and construction is not a defect in itself, but only when accompanied by inadequate communications between groups or by incompetent staff. The basic problem of communications is one receiving much attention in administrative circles these days, and it is certainly vital to engineering administration.

(2) *Incompetent Staff* can get any organization into trouble. Amid the present clamoring for more engineers, the profession is in grave danger of de-emphasizing quality. There is positive evidence indicating that there has been no shortage of rank-and-file engineers in North America during this century. There does seem to be a shortage in the upper

grades, however, and, in the future, this shortage may well become more acute while in the lower grades greater surpluses develop.

(3) *Inadequate Specialization.* This is no doubt a just criticism of some organizations. Most progressive engineering firms, however, have recognized that specialization is vital, not only for competence, but also for efficiency. A specialist who is given adequate time for study and research is able to produce at much higher efficiency,

(4) *Failure to accept advice from consultants.* Such an action is a fault only if the consultant is right. It is a virtue if the consultant is wrong. Sometimes consultants are wrong. For example, I have seen an engineering administrator decide, on the basis of his own experience and that of some of his staff, to have a design based on only half the settlement predicted by the soils consultant. When the structure was built, it settled only a quarter of the consultant's forecast.

The last point accents the engineering administrator. I would define the engineering administrator as an engineer who must make technical decisions in matters involving either a number of specialties or a conflict between specialists. As engineering becomes more complex and specialities become more specialized the role of the engineering administrator becomes more important. The engineering administrator must, in the first place, decide when a consultant is required and who is to be called. He must then decide how to treat the consultant and his recommendations. The consulting engineer may have a very inadequate knowledge of some of the related technical considerations bearing on a problem or he may have a personality requiring special treatment to obtain best results. The "satisfactory formula" for taking full advantage of a consultant's services is thus a person—the engineering administrator.

In summary, when a good engineering organization utilizes a good consultant, the results will be good. If either are inferior, difficulties may be expected.

Closure to the Discussion

By K. Terzaghi

The paper under discussion presented the thesis, that the success of projects involving earthwork operations requires intimate cooperation between the construction organization and the soil mechanics division from start to finish, and not only during the design stage. If this fundamental rule is disregarded failure may ensue in spite of competent advice rendered by the consultant.

Although the paper was discussed by sixteen prominent engineers with very different professional backgrounds, none of the discussers disagreed with the writer and each one of them contributed thoughts, observations and experience records confirming the thesis. The discussers represented the following categories: (a) Owners who maintain permanent staffs for design or supervision, (b) Consulting firms operating on a large scale in a great variety of fields, (c) Full time consultants assisted by a small organization or none at all, and (d) Professor-Consultants.

(a) *Owners Who Maintain Permanent Staffs for Design and Supervision*

G. L. MacKenzie and R. Peterson (Prairie Farm Rehabilitation Administration, Saskatoon, Sask.) report that their organization includes a soil mechanics section, continuously engaged in maintaining contact between the design section and the construction operations. The soil mechanics section is assisted by a board of outside consultants. R. F. Ogilvy (Aluminum Company of Canada) describes in detail the duties which are assigned to the soils engineers in his organization. They involve the maintenance of continuous contact between the design department and the men engaged in construction from start to finish for the purpose of detecting significant discrepancies between assumed and real soil conditions before it is too late to correct the design.

(b) *Consulting Firms Operating on a Large Scale in a Great Variety of Fields*

Like all the other discussers, those associated with such firms admit the importance of close cooperation between the design department and the men in the field until the end of construction. M. H. Cutler (Stone and Webster Engineering Corporation), F. A. Mars-

ton (Partner, Metcalf and Eddy) and C. S. Proctor (Moran, Proctor, Mueser and Rutledge) describe the benefits which their clients derive from the close cooperation which prevails in their respective organizations between office and field. If problems are encountered which require highly specialized knowledge, the services of a qualified outside consultant are secured. C. P. Dunn (Morrison and Knudsen) compares a consultant of this category to a modern electronic computing machine: "The answers that come out of him can be no more reliable than the data you feed into him". This remark hits the nail on the head and also applies without any modification to the men in charge of projects involving earthwork operations.—H. Grace (partner, Wilson Kirkpatrick) comments on the relationship between consultant and client in British engineering practice.—N. D. Lea (Foundation of Canada Engineering Corporation Ltd.) discusses the functions of the Engineering Administrator in large engineering organizations.

(*c*) *Full Time Consultants Operating With a Small Permanent Staff or No Staff at All*

A. J. Ackerman (formerly Vice President Brazilian Light and Power Company) emphasizes the importance of a clear understanding between client and consultant concerning the responsibilities to be carried by the consultant.—D. [illegible]. Bleifuss (Bleifuss, Hostetter and Associates, formerly Chief Engineer, International Engineering Company Ltd.) cites examples of serious mistakes committed by clients in securing the services of independent consultants.—H. J. B. Harding (formerly John Mowlem and Company, contractors, London, England) mentions the fact that an independent consultant "can give good service if he is not pressed with too many simultaneous inquiries and has time for undisturbed consideration of the problems." This is a fact of outstanding importance, because there is no doubt that a consultant's competence increases rapidly with the amount of time he spends on a digest of his case records and related research, everything else being equal. For the same reason Ackerman points out that a consulting engineer "must be willing and eager to spend a substantial part of his time on study and on his continuing professional development without receiving immediate financial compensation", and Jacob Feld is justified in recommending that the independent consultant should learn very early in his practice to use the word

"no". "It is not necessary that every question that comes in be accepted as a commission". Every independent consultant can limit the commissions he accepts to the number compatible with his professional development provided he has the required self-control.—F. E. Schmitt (formerly Editor of Engineering News-Record) examined the conditions described in the paper from a historic point of view. He arrived at the conclusion that the recent rapid advance of design and construction procedures was not matched by an equally rapid development in the field of coordination. The discrepancy between the improvement of the tools and the development of the skills for coordinating the actions of the men using the tools has temporarily thrown the mechanism of production in the field of earthwork engineering out of gear.

(*d*) *Professor-Consultants*

A. Casagrande (Harvard University) discussed the dangers to the consultant's reputation growing out of assignments which do not permit the consultant to remain in intimate contact with the job until construction is completed.—R. B. Peck (University of Illinois) points out, that "the work (of the Professor-Consultant) should not be routine or of a character within the ordinary scope of activities of the practicing engineer." Compliance with this specification requires rigorous self-control, which is by no means a common attribute of the human species. However, if self-control prevails, a gifted Professor-Consultant has a unique opportunity to become outstandingly competent in his field. As R. M. Hardy (University of Alberta) says, "contrary to opinions so widely held, experience in engineering work is by itself no guarantee of a high degree of professional competence." Experience furnishes only the raw material and competence is the result of a strenuous process of digestion.

Since each one of the participants in the discussion has a professional personality of his own and since in addition, each one of them has a broad background of experience in his particular line, the discussions represent an outstandingly valuable supplement to the contents of the paper. Therefore they deserve the attention of every practising civil engineer and I wish to express my gratitude to all those who gave the readers the benefit of their thoughtful consideration of the topics of the paper.

OF GENERAL INTEREST

GROWING PAINS

THE present membership of the B.S.C.E. is about 1100 members scattered through 32 states and 9 countries as follows:

States

Alabama	1
Arizona	1
California	11
Colorado	1
Connecticut	18
Delaware	1
Dist. of Columbia	4
Florida	7
Georgia	1
Idaho	1
Illinois	2
Indiana	2
Kentucky	4
Louisiana	2
Maine	13
Massachusetts	890
Michigan	5
Missouri	3
New Hampshire	22
New Jersey	1
New York	22
North Carolina	2
Ohio	4
Oregon	1
Pennsylvania	8
Rhode Island	19
Tennessee	1
Texas	3
Vermont	2
Virginia	4
Washington	5
West Virginia	1
Wisconsin	1

Countries

Australia	1
Bahamas	1
Brazil	2
Cuba	1
France	1
Panama	1
Puerto Rico	2
Syria	1
Turkey	1

Each member of the Society receives a subscription to our JOURNAL but in addition to these, subscriptions go to 38 states and 35 foreign countries or subdivisions thereof as follows:

Alabama	2	Rhode Island	1
Arizona	1	Tennessee	3
California	12	Texas	8
Colorado	5	Utah	2
Connecticut	3	Washington	1
Delaware	1	Wisconsin	3
Dist. of Columbia	[illegible]	Alaska	1
Florida	2	Argentina	2
Georgia	[illegible]	Australia	3
Idaho	[illegible]	Brazil	3
Illinois	[illegible]	[illegible]	1
Indiana	[illegible]	[illegible]	1
Iowa	[illegible]	[illegible]	6
Kansas	2	Quebec	2
Louisiana	2	Saskatchewan	1
Maryland	2	Ceylon	1
Massachusetts	4	China	1
Michigan	4	Czechoslovakia	1
Minnesota	1	England	4
Mississippi	2	Finland	1
Missouri	4	France	2
Montana	1	Germany	1
Nebraska	2	Holland	46
New Hampshire	1	India	10
New Jersey	1	Israel	1
New Mexico	1	Italy	1
New York	13	Japan	8
North Carolina	2	Morocco	1
Ohio	5	New South Wales	1
Oklahoma	2	New Zealand	2
Oregon	1	Norway	1
Pennsylvania	5		

[illegible] meeting following the di[illegible]

[illegible]ERT W. MOIR, *Secre*[illegible]

Portugal	2	Tasmania	1
Puerto Rico	1	Uruguay	1
Russia	17	Venezuela	2
South Africa	3	Western Australia	1
South Australia	1		

A glance at the tabulations above indicates that although we are a local society there is an international flavor.

Since interest in our Society and in our JOURNAL is world-wide it is difficult to understand why more interest is not shown by local qualified engineers, numbering hundreds, who are not members of our society. Membership has been increasing steadily since the depression of the 30's but our growth falls short of what it ought to be. We are still far from the "saturation point".

Your membership committee makes every effort to obtain new members but experience has shown that the best results are obtained through personal contacts, and though one representative of each of the larger engineering organizations is a member of [illegible] committee, it is next to impossible [illegible] each all qualified [illegible]pects. You [illegible] therefore in[illegible]vited [illegible]der your [illegible]mber [illegible] the [illegible] and to ma[illegible]btaining us a new [illegible] brochures describing [illegible]ges of membership in the Boston Society of Civil Engineers and application blanks for membership are available by contacting the chairman of the Membership Committee or your Secretary.

The following listed organizations, together with the number of their employees who are members of the Society, make up your Honor Roll. Is your firm represented here? Can you improve your position in the standing?

Fay, Spofford & Thorndike, Inc.	88
Metcalf & Eddy	72
U.S. Corps of Engineers	60
Chas. T. Main, Inc.	38
Mass. Inst. Technology	34
Mass. Dept. Public Works	27
M.D.C. (Construction Division)	19
Jackson & Moreland	17
Camp, Dresser & McKee	15
New England Power Service Corp.	13
Stone & Webster Engrg. Corp.	13
Northeastern University	12
Clarkeson Engineering Co.	11
U.S. Geological Survey	11
City of Boston	10
Harvard University	10
Mass. Dept. Public Health	10
Chas. A. Maguire & Assoc.	8
M.D.C. (other divisions)	8
[illegible]t. Transit Authority	8
[illegible] Whitman & Howard	8
Edward & Kelcey	7
Crandall Dry Dock Engrs.	[illegible]
[illegible]vden, Harding & Buchanan	5
[illegible] England Survey Service	5
Tufts University	5

ROBERT W. MOIR

PROCEEDINGS OF THE SOCIETY

MINUTES OF MEETING

Boston Society of Civil Engineers

APRIL 21, 1958.—A Joint Meeting of the Mass. Section of the A.S.C.E. with the Boston Society of Civil Engineers was held this date at the Faculty Club at M.I.T., President Ernest L. Spencer of the Mass. Section of ASCE presiding.

After dinner, President Spencer called the meeting to order at 7:30 P.M., and after introducing the head table guests, turned the meeting over to President William L. Hyland of the B.S.C.E. to conduct any necessary business. President Hyland called upon the Secretary for routine announcements after which the meeting was turned back to President Spencer of the A.S.C.E., who introduced the guest speaker, Mr. J. O. Bickel, Partner in the firm of Parsons, Brinckerhoff, Hall and MacDonald.

Mr. Bickel presented a most interesting paper on the design and construction of the $60 million Hampton Roads Crossing in the Chesapeake Bay. The talk was illustrated by slides and moving pictures.

A brief discussion followed, with adjournment called at 9:00 P.M.

Seventy-six members and guests attended the dinner, and eighty-three attended the meeting following the dinner.

ROBERT W. MOIR, *Secretary*

MAY 12, 1958.—A regular meeting of the Boston Society of Civil Engineers was held this evening at the United Community Services Building, 14 Somerset Street, Boston, Mass., and was called to order by President William L. Hyland, at 7:00 P.M.

President Hyland stated that the minutes of the previous meeting held April 21, 1958 would be published in a forthcoming issue of the JOURNAL and that the reading of those minutes would be waived unless there was objection.

The Secretary announced the names of applicants for membership in the BSCE and that the following had been elected to membership May 12, 1958.

Grade of Member—James L. Bell,* Samuel Heyman,* Paul A. Levy, Charles W. Perry.*

Grade of Junior—Raymond W. McNamara, John G. McIntosh

President Hyland introduced the speaker of the evening, Dr. W. F. Libby, Commissioner, Atomic Energy Commissioner, Washington, D. C., who gave a most interesting illustrated talk on "Project Plowshare—The Non-Military Uses of Nuclear Explosions".

A brief discussion period followed. Thirty-[illegible] members and [illegible]ts attended th[illegible] and fo[illegible]e) attended the [illegible]nner.

RO[illegible]ary

STRUCTURAL SECTION

NOVEMBER 13, 1957.—A meeting of the Structural Section was held in the Society Rooms on this date. The meeting was called to order at 7:08 P.M. by Chairman John M. Biggs. After the reading of the Minutes and announcement of the next Structural Section meeting on December 11, the Chairman introduced Mr. T. R. Higgins, Director of Engineering and Research, American Institute of Steel Construction.

Mr. Higgins' talk, "Plastic Design in Steel—A Progress Report," covered the history of plastic design and the more recent developments, particularly with regard to the work that is being done

*Transfer from Junior.

by the AISC. The speaker covered such subjects as the economy resulting from the use of plastic design in suitable structures and the type loadings where plastic design should be used with caution. A considerable amount of testing has been done in this country and the AISC is now engaged in producing a manual covering plastic design, which manual will be available shortly. Mr. Higgins discussed several questions with members of the audience, after which slides showing buildings, designed by plastic design methods, were shown.

Thirty-seven members and guests attended this meeting.

The meeting adjourned at 8:55 P.M.

WILLIAM A. HENDERSON, *Clerk*

DECEMBER 11, 1957.—A meeting of the Structural Section was held in the Society Rooms on this date. The meeting was called to order at 7:00 P.M. by Chairman John M. Biggs. It was announced that the next meeting of the Structural Section would be held on January 8, with Mr. A. S. Marvin, Chief Engineer of the Bridge Division, United States Steel Corporation, the speaker.

Mr. William F. Swiger of the Stone and Webster Engineering Corporation spoke on "Structures for Offshore Drilling."

His company has been engaged by four oil companies to design the rigs for drilling oil in the off-shore areas of the Gulf and Pacific coasts. Mr. Swiger told of the different conditions in the two areas. The Gulf coast locations generally are on sandy bottom of comparatively shallow depth, and wind velocities may be encountered up to 150 miles per hour and with high breakers. On the other hand, the ocean bottom on the Pacific coast tends toward unevenness, but winds seldom exceed 75 miles per hour. Several wave theories are used in design, depending on water depth and other conditions at the site. Types of equipment vary from the simple barge type, used mostly in shallow water, to the more complicated types where platform elevation is adjusted by hydraulic jacking on the vertical supports. Development and design of rigs in the near future is uncertain, pending examinations of existing laws by the state legislatures and determination by the Supreme Court of ownership of various off-shore lands.

Attendance: 32.

WILLIAM A. HENDERSON, *Clerk*

JANUARY 8, 1958.—A joint meeting of the Structural and Construction Sections was held in the Society Rooms on this date. The meeting was called to order at 7:15 by Chairman John M. Biggs. The minutes of the previous meeting were read and approved.

Mr. Biggs announced that the next regular meeting would be held on Wednesday, February 12, at which meeting the tunnel section of the Boston Central Artery will be discussed by Mr. E. C. Keane and Mr. Eric Reeves. Professor Boerum will speak at the March meeting, and a representative of the Timber Engineering Company in April. The meeting was then turned over to Mr. R. J. Hanson of the Construction Section. Mr. Hanson read the nominations for officers of the Construction Section.

Mr. Biggs introduced Mr. A. S. Marvin, Chief Engineer, American Bridge Division, United States Steel Co., whose subject was "The Effect of Design on Cost of Fabricated Structural Steel." Mr. Marvin said that the most important factor affording economical detailing was simplicity and complete symmetry. Items should be made in design to use the fewest number of pieces feasible, and each member should be of the fewest number of component parts. Cost of handling and shipping of structural steel must be considered, especially the shipping of longer or larger pieces that require special carriers. He states that splices often cost more than the material they are intended to save. As an example, it may be more economical to use the same

section of column for several stories, rather than attempt to save material through splicing. In general, requests from fabricators for detail changes should be granted, since section changes generally result in simpler fabrication. Contract drawings must be completely clear as to intent.

Eighty-seven members and guests attended.

WILLIAM A. HENDERSON, *Clerk*

APRIL 9, 1958.—A meeting of the Structural Section was held in the Society rooms on this date. Chairman Albrecht called the meeting to order at 7:10 P.M. The minutes of the previous meeting of March 12 were read by the Clerk. It was moved, seconded and carried that the minutes be approved as read.

Chairman Richard W. Albrecht introduced the speaker of the evening, Mr. Ralph H. Gloss, Vice President of Timber Engineering Company, who spoke on "The Future Role of Timber". A film entitled, "Coming Out of the Woods", was shown which described some of the more recent developments and re[illegible]ing carried on in timber co[illegible]r

[illegible]loss explained that the Timber [illegible]ering Company was formed by the National Lumber Association for the purpose of developing new and better ways of using timber. He emphasized that forty years from now it is expected that the consumption of timber will be eighty per cent greater than it is today. The point was made that only half of the timber from the trees is now being used and the remainder is wasted. The effort of the Timber Engineering Company is directed towards making further use of the waste lumber.

It was pointed out that fifty per cent of the timber stands of the United States are owned by the government and that these stands are being very well reforested by natural or artificial means. A major problem exists in getting the owners of the remaining fifty per cent of the timber stands which are in private hands to exercise care and conservation in their exploitation.

Mr. Gloss emphasized that the timber connector developed by Timber Engineering Company was a very important cause of the revival of timber construction and that the addition of laminated timber construction is causing even further expansion of the timber industry. The glued laminated timber construction is becoming a fabrication industry similar to the steel fabrication industry and permits the fabrication of timber members greatly in excess of the size that trees grow naturally.

At the conclusion of the meeting there were considerable questions asked of Mr. Gloss regarding standards for timber construction and the steps being taken to maintain our supply of standing timber.

The meeting adjourned at 9:15 P.M. The attendance was 33.

PAUL RANDALL, *Clerk*

CONSTRUCTION SECTION

MAY 28, 1958.—A meeting of the Construction Section was held at the Society Rooms after an informal dinner at the Smorgasbord. The meeting was called to order by William F. Duffy, Chairman, at 7:00 P.M.

Chairman Duffy introduced speaker Mr. Charles Kiesel, Jr., Manager, Prestressed Products Division, Raymond Concrete Pile Company, who gave a most interesting paper on "Construction of the Lake Pontchartrain Bridge". Presentation consisted of the showing of an extremely good technical movie which described in general the Lake Pontchartrain Bridge Project, a 24-mile long crossing north of New Orleans, Louisiana. The film gave a particularly good description of the casting yard procedures used for constructing the precast prestressed elements of the bridge. A complete picture of the auto-

moted manufacturing and erection processes used for the Raymond Cylinder Piles which made up the bridge substructure and the monolithic precast prestressed roadway sections forming the bridge superstructure was given.

An interesting question and answer period followed the film presentation.

Fifty members and guests attended the meeting.

FRANK J. HEGER, *Clerk*

ADDITIONS

Members

James F. Bell, 267 Moody Street, Waltham 54, Mass.

Joseph A. Bodio, 411 Lexington Street, Auburndale 66, Mass.

Robert G. Ferguson, 67 Woodland Road, Holden, Mass.

Arthur Gordon, 19 Woodstock Avenue, Brighton 46, Mass.

Samuel Heyman, 315 E. 68th Street, New York 21, N. Y.

Paul A. Levy, 8 Edith Road, Framingham, Mass.

Charles W. Perry, 1436 Gladstone Drive, Sacramento, California

Junior

Paul J. Collins, 395 Marlborough Street, Boston 15, Mass.

Charles T. Gwinn, Main Street, Rowley, Mass.

Raymond W. McNamara, 57 Dwight Street, Brookline 46, Mass.

Paul M. Pratt, 23 Highland Avenue, So. Braintree, Mass.

Herrick H. Spicer, 23 Imbaro Road, Boston 36, Mass.

James N. White, 26 Fairfield Terrace, Norwalk, Conn.

PROFESSIONAL SERVICES AND ADVERTISEMENTS

The advertising pages of the JOURNAL aim to acquaint readers with Professional and Contracting Services and Sources of Various Supplies and Materials. You would find it of advantage to be represented here.

Volume 45 JULY, 1958 Number 3

BOSTON SOCIETY OF CIVIL ENGINEERS

FOUNDED 1848

PROFESSIONAL SERVICES

INDEX TO ADVERTISERS

COMMITTEES

1958-1959

NOMINATING COMMITTEE

Past Presidents (Members of the Committee)

Emil A. Gramstorff — Chester J. Ginder — Miles N. Clair

John C. Rundlett — John M. Biggs
George W. Hankinson — Paul A. Dunkerley
Frank L. Heaney — William A. Henderson
(Term expires March, 1959) — (Term expires March, 1960)

SPECIAL COMMITTEES

PROGRAM

William L. Hyland, *Chairman, ex-officio*

Edward C. Keane — Wesley F. Restall — Richard W. Albrecht, Jr.
E. Stanley Johnson — Francis H. Kingsbury — Leo F. DeMarsh
Joseph C. Lawler — Robert W. Moir — James W. Daily
Harry L. Kinsel — Clair N. Sawyer — George A. McKenna
William F. Ryan — William F. Duffy

PUBLICATION

Charles E. Knox, *Chairman*

George C. Houser — Llewellyn L. Cross, Jr. — George A. McKenna
Robert L. Meserve — Clair N. Sawyer — William F. Duffy
Clarence R. Wickerson — Richard W. Albrecht, Jr. — Leo F. DeMarsh
James W. Daily

LIBRARY

Leland F. Carter, *Chairman*

Armand L. Phaneuf — Robert S. Kleinschmidt — Joseph H. Lenney
Lee M. G. Wolman — George A. L. Brown — Adin B. Bailey

HOSPITALITY

Whitney K. Stearns, *Chairman*

Joseph E. Henry — Clement Zowadniak

JOHN R. FREEMAN FUND COMMITTEE

Howard M. Turner, *Chairman*

William F. Uhl — Leslie J. Hooper — Thomas R. Camp

DESMOND FITZGERALD AWARD

Emil A. Gramstorff, *Chairman*

E. Sherman Chase — Ernest A. Herzog

SANITARY SECTION AWARD

E. Sherman Chase, *Chairman*

Darrell A. Root — Frank L. Heaney

STRUCTURAL SECTION AWARD

Emil A. Gramstorff, *Chairman*

Myle J. Holley, Jr. — James Adam, Jr.

HYDRAULICS SECTION AWARD

E. Sherman Chase, *Chairman*

Donald R. F. Harleman — Clyde W. Hubbard

SURVEYING & MAPPING SECTION AWARD

Ernest A. Herzog, *Chairman*

C. Roger Pearson — Thomas C. Coleman

CONSTRUCTION SECTION AWARD

Emil A. Gramstorff, *Chairman*

Frederic N. Weaver — Herbert J. Albee

SUBSOILS OF BOSTON

Miles N. Clair, *Chairman*

Lawrence G. Ropes — Irving B. Crosby — Chester J. Ginder

MEMBERSHIP CENTRAL COMMITTEE

Paul J. Berger, *Chairman*

Gerald F. Blake — John C. Adams, Jr. — William H. Hamilton
Robert T. Colburn — Roland S. Burlingame — Robert A. Snowber
William F. Condon, Jr. — William E. Brooks — William A. Henderson
Dean F. Coburn — K. P. Devenis — Robert W. Moir
John L. Burdick

AUDITING COMMITTEE

Kenneth F. Knowlton — Joseph C. Lawler

ADVERTISING COMMITTEE

Robert A. Bierweiler, *Chairman*

Charles E. Knox — Benjamin A. Lekesky — William R. Colton
Frank L. Bridges — Charles M. Anderson — John H. Hession

PUBLIC RELATIONS COMMITTEE

William A. Fisher, *Chairman*

Samuel J. Tomasello — Thomas J. Rouner — Richard H. Ellis
Horace B. Perry — Benjamin Mills, 3rd

JOINT LEGISLATIVE COMMITTEE

Edward Wright — James F. Brittain

INVESTMENT COMMITTEE

Charles O. Baird, Jr., *Chairman*

William L. Hyland — Edward C. Keane