THE WARRAGAMBA PIPELINES STILLING BASIN

By
THOMAS F. CHEYER*

(Presented at the meeting of the Hydraulics Section, Boston Society of Civil Engineers, May 3, 1967.)

INTRODUCTION

Approximately 2.8 million people are now served by the Metropolitan Water, Sewerage and Drainage Board of Sydney, Australia, at an average per capita rate of 98 gallons[1] per day, resulting in an annual average consumption of 275 mgd (million gallons per day). The present maximum daily consumption during the year may reach 500 mgd. Projected annual average consumption for the area served by the Board is estimated to be 455 mgd in the year 1985 and 745 mgd in 2010.

The Warragamba Catchment supplies the major portion of the present water needs of the Sydney area. This catchment, with its 3,480 square miles of drainage area, is tapped for water supply by the newly constructed Warragamba Dam, creating Lake Burragorang with its 452,505 million gallons capacity. The estimated safe draft of this supply is 263 mgd, or about 74 per cent of the total developed supply capability of the Sydney system. Thus, the Warragamba Catchment is of prime importance in meeting the water supply needs of the metropolitan Sydney area for many years to come.

Camp, Dresser & McKee was retained by the Board in August, 1964, to make an engineering investigation of the Board's water supplies with the primary emphasis on preparing preliminary plans for the treatment of the Warragamba supply. The investigation was completed in August, 1965, and Camp, Dresser & McKee is at present preparing final plans for a water treatment facility with a capacity of 700 mgd. This paper will report on one of the many studies conducted in conjunction with the design of this treatment plant, called the Prospect Water Treatment Works.

* Hydraulic Engineer, Camp, Dresser & McKee.

1. The term "gallon" as used in this article refers to the Imperial gallon, equivalent to a volume of 0.16 cubic feet.

THE WARRAGAMBA PIPELINES

Warragamba Dam is situated approximately 40 miles west of Sydney. Water is transported by pipeline to Prospect Reservoir, a storage and balancing reservoir located approximately 8 miles west of the city. In addition, water from the Metropolitan Catchment is also brought to Prospect Reservoir, but by open canal. From Prospect, the supply is distributed to the service reservoirs feeding the various reticulation systems. A schematic representation of the supply is depicted in Fig. 1. The proposed water treatment plant will be constructed adjacent to Prospect Reservoir, thus being located at the junction of the Warragamba and Metropolitan supplies.

The original pipeline between Warragamba and Prospect (See Fig. 1) was approximately 90,250 ft in length and consisted of 13,650 ft of two parallel cement-lined 106-in diameter conduits, emanating from Warragamba Dam and tying into a single 84-in diameter cement-lined conduit, which completed the connection to Prospect Reservoir. The maximum static head on the pipeline is 191 ft, giving a maximum flow capability of 190 mgd, or less than the net safe draft of the catchment. This pipeline was built as an interim transmission main.

Additional transmission capacity from the Warragamba Catchment is required in order to keep up with a rapidly increasing demand (consumption is doubling approximately every twenty to twenty-five years). In fact, there is difficulty in meeting peak system demands even now. Accordingly, the final phase of the pipeline is now proceeding with the addition of a 120-in pipeline, which will increase the maximum capacity to 550 mgd. Design of this main has been completed by the Sydney Water Board and construction is underway. It is anticipated that the new pipeline and outlet works will be completed by 1969.

The 120-in mild steel, cement-lined pipeline ties into one of the existing 106-in diameter mains near the source (See Fig. 1) and parallels the existing 84-in main for all but the last 2,000 ft. At this point the two pipelines are interconnected and two 120-in mains traverse the southern perimeter of Prospect Reservoir, a distance of approximately 2,000 ft to the new outlet works. From the outlet works water can enter either Prospect Reservoir or the proposed treatment plant.

A plot of the pipeline characteristics is shown in Fig.2. From the figure it can be seen that for Warragamba Reservoir full, the maximum discharge is about 550 mgd, while for the reservoir at elevation R.L. 300 (85 ft available head) the maximum discharge is about 380 mgd.

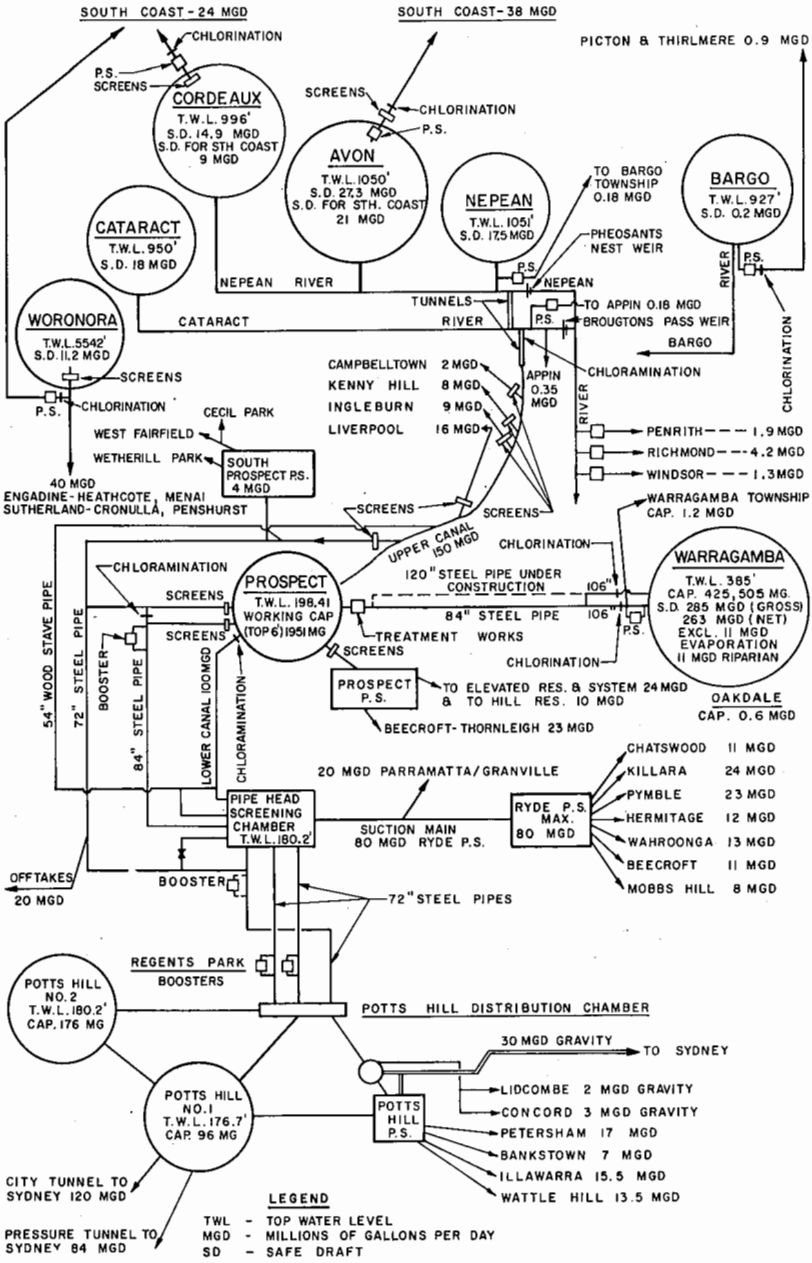

Fig. 1 — Schematic of Sydney Water Supply System

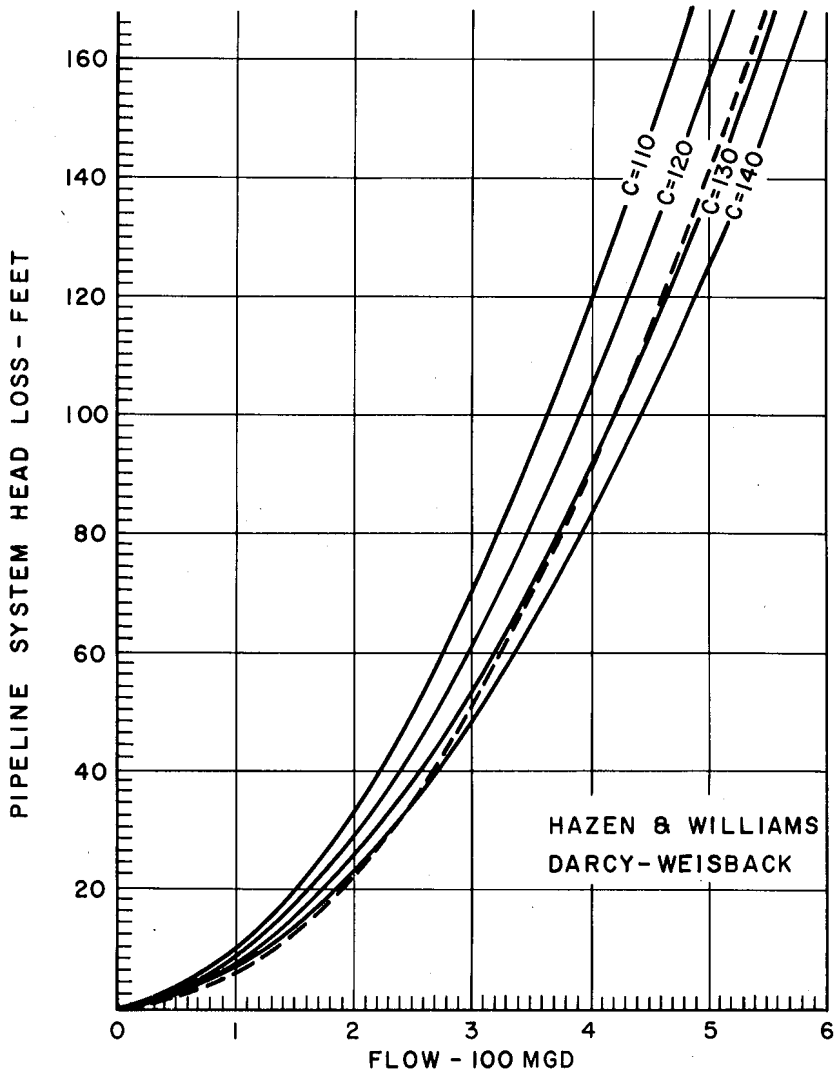

Fig. 2 — Head Loss - Discharge Rlationships for the New Warragamba Pipelines

THE NEED FOR FLOW CONTROL AND ENERGY DISSIPATION DEVICES

As indicated previously, the pipeline outlet works can discharge either to Prospect Reservoir or to the treatment plant. The treatment plant will be constructed in two stages. The first stage will provide only for clarification, while the second stage will both clarify and filter the water. During the first phase, Prospect Reservoir will be essentially "on line" when needed, while during the second stage this reservoir will be used only as emergency storage, and a covered filtered water reservoir will be used in its stead to meet system fluctuations in demand. For both stages of treatment it is necessary to control flow of the two sources of supply, with this control being more critical when complete treatment is provided. This follows from the fact that only a certain mismatch between supply and demand can be tolerated and that limited storage is available during the second phase to balance this mismatch.

For a given elevation of the water surface at Warragamba Dam, the energy dissipation per pound of water flowing from Warragamba to the outlet works at Prospect is a constant. Thus, referring to Fig. 2, if the reservoir is full, each pound has to dissipate 168 foot-pounds of energy. For flows less than the pipeline maximum, in this case less than 550 mgd when the reservoir is full, only part of this dissipation is by the pipeline, and the remainder has to be dissipated by some device.

The *rate* of energy dissipation by this control device is, however, variable. For no flow, there is, of course, no power dissipation. For the maximum flow at a given reservoir elevation, there is again no power dissipation by this device, all the dissipation occurring by wall friction and local losses in the transmission main. Thus, the maximum rate of energy dissipation by the flow control device does not occur at the maximum flow rate but at some flow intermediate between the maximum and zero flow rate. A plot of the power dissipation by the flow controller for the maximum operating level of Warragamba Reservoir is depicted in Fig. 3. From the figure it is seen that 7,300 horsepower (HP) will be dissipated by the flow control device at 320 mgd, or at 58 per cent of the maximum flow rate.

METHODS OF FLOW CONTROL AND ENERGY DISSIPATION

It is convenient to classify the methods of energy dissipation by the place where the energy is dissipated. Thus, the excess energy can be destroyed either within the pipeline itself, or upon exit from the pipeline. Within the

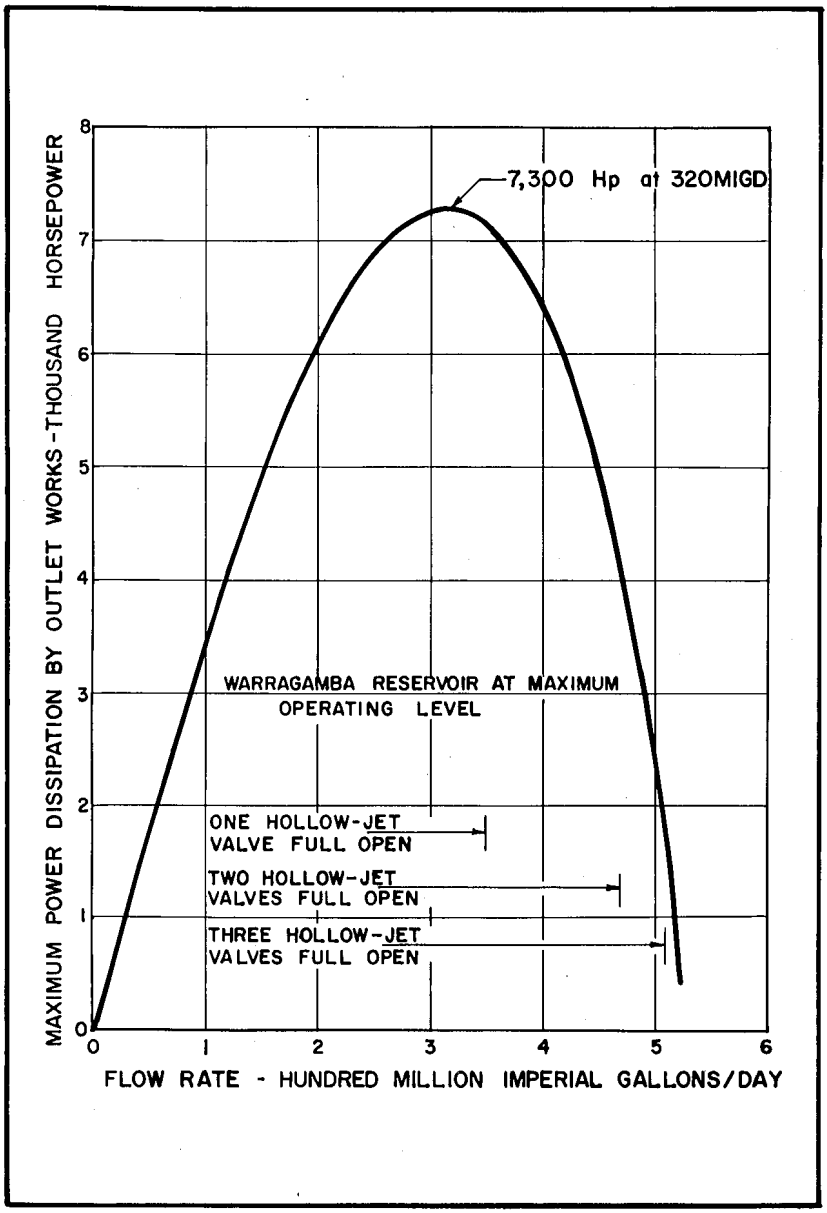

Fig. 3 — Power Dissipation - Discharge Relationship for Warragamba Pipelines Outlet Works at Maximum Reservoir Operating Level

pipeline, throttling valves may be used, or sections of the parallel pipeline system may be closed so that part of the system acts as a single pipe[2], or a combination of these two methods may be used. Dissipation of the excess energy outside the pipeline system is normally accomplished in a stilling basin or stilling pool when the required energy dissipation is large.

Dissipation of the energy entirely within the pipeline has the advantage that a stilling basin with its appurtenances is not required. Also, the flow exits from the pipeline in a relatively quiet manner, so that wave action in the channel leading to the treatment works is not a problem. This mode of operation does, however, increase the possibility of cavitation in the pipeline system, particularly at existing sectioning valve locations, because of consequent reduction in pressure due to energy dissipation and because of the valves' locations and elevations. If the rates of flow are to be controlled by partial throttling of the sectioning valves, then specially constructed valves and controls are required to withstand the hydrodynamic forces for a given flow rate and the additional forces induced by changing from one flow rate to another. If control of the flow rate is to be effected by sectioning of the pipeline (complete closure of certain sectioning valves), then special valves may not be required if the operation is to be intermittent, i.e., the flow would have to be stopped by downstream control valves while the sectioning valves were adjusted in still water. Operation of the system in this fashion (using parallel pipes for some sections, and a single pipe for other sections) would give a stepped, rather than continuously variable, control of the flow rate. Both methods of control by dissipation of the energy within the pipeline have the disadvantage that control of the system is scattered throughout the length of the pipeline. This type of operation would require that, for each different flow pattern, a number of pipeline protective devices (pressure or velocity sensors) would have to be adjusted. Incorrect setting or malfunction of any of these devices could endanger the pipeline.

Control of the flow rate by dissipation of the energy outside the pipeline system has the decided advantage of decreasing the possibility of cavitation within the pipeline to a minimum by maintaining the pressure within the pipeline as high as possible for all flow rates. Further, it allows continuous control of the flow rate, centralized at the point of dissipation so that performance can be readily observed. In addition, it decreases the number

2. Considerable preliminary investigation on flow control by pipeline sectioning was conducted by the Board, but was not recommended as a method of control.

of specially constructed valves required. However, this type of dissipator requires a stilling basin that must give minimal wave action at the exit to the basin.

Outlet flow control has been chosen for the Warragamba pipeline as it is more advantageous to the overall design.

OUTLET REGULATING WORKS

For flow rates less than the maximum and with excess energy dissipation outside the pipeline system, the excess head is converted to a high exit velocity from the particular flow-regulating device utilized. This velocity must be dissipated in a controlled manner in order to avoid spray, waves in the channel leading to the treatment works, cavitation damage to the pipeline exit basin, or cavitation or vibration damage to the regulating device. The flow from the pipeline can be discharged either above or below the waterline of the receiving basin. Discharge below the waterline normally requires a deeper stilling basin, but it is easier to control waves and spray. Further, it has the advantage of allowing the maximum possible effective head to be produced over the length of the pipeline for a given tailwater elevation in the stilling basin so that the largest possible flow can be obtained.

The control of the flow rate at the pipeline exit may be either continuously variable (by valves), or it may be discontinuous or stepped, by using a number of nozzles or orifices.

The usual practice for control of the flow when discharging above the surface of the stilling pool is to use valves that break up the flow rather than leave it as a solid jet. Nozzles and orifices are generally not used because they produce solid jets. Breaking up the jet makes use of air resistance to dissipate some of the energy, thus reducing wave problems.

One type of free discharge valve is the cone dispersion valve, also known as the sleeve regulator or Howell-Bunger valve. This valve has the advantage of being relatively inexpensive for its size and of being quite efficient (the coefficient of discharge is 0.85 at 100 per cent stroke). The normal location of this valve is well above the stilling pool so that only spray falls into the pool. This type of operation produces considerable mist or fog, particularly on windy days, which would be objectionable in the Project Reservoir area. Elevating the valve sufficiently above the stilling pool so that the jet is broken up would also reduce the maximum flow rate by about 35 mgd at low reservoir levels. If this type of valve is located immediately above the water surface, the stilling basin design would have to incorporate the effects of the unbroken jet of water. Design criteria for such basins have

not been developed and extensive model tests would be required to develop the appropriate basin.

Hollow-jet valves, developed by the U.S. Bureau of Reclamation, have become increasingly popular, since their performance is virtually cavitation-free. The use of hollow-jet valves had been considered among other alternatives by the Sydney Water Board prior to the engagement of Camp, Dresser & McKee. The Bureau of Reclamation has developed extensive design criteria for stilling basins to be used in conjunction with these valves, which operate close to the water surface so that the maximum head is available. The basin design criteria and valve design criteria were developed from extensive model tests, and subsequently confirmed by results from prototypes.

Submerged discharge of the pipeline can be controlled either by use of a number of nozzles (or orifices), or by control valves.

Nozzles have the advantage of being cheaper and of having no moving parts, so that wear is minimized. However, this type of control is not continuously variable, and allows only a limited number of distinct flow rate selections, depending upon the number and size of nozzles installed. Moreover, the design of this type of stilling basin for the dissipation of large velocity heads must again be determined by extensive development model tests. On the other hand, if the requirement is the dissipation of small velocity heads, this can easily be accomplished through the use of impact stilling basins developed by the Bureau of Reclamation.

Control of a submerged discharge by valves at the pipeline exit requires that these valves be designed to be cavitation-free for the desired flow range. This is often difficult to obtain in any valve that first decreases the flow area and then increases it (as in butterfly valves, needle valves, and the like) and cannot be guaranteed without an adequate testing program. It is a better policy to use a valve that does not have this flow pattern, such as a cone dispersion valve which, however, must be aerated in order to permit flow expansion at the base of the moving cone and prevent cavitation at that point. The air required is of the order of the volume of water being passed, and this is sometimes difficult to supply satisfactorily.

It is felt that the difficulties enumerated above with respect to flow regulation at the pipeline exit will be avoided if hollow-jet valves are utilized in combination with submerged discharge nozzles. The hollow-jet valves will be utilized for the flow range from minimum flow to near maximum flow, while the nozzles will be utilized for maximum flow rates. Thus, continuously variable, free discharge control will be used for most of the flow range, with a final step to maximum discharge by the nozzles. The

hollow-jet valves will insure cavitation-free performance through the critical portion of the operating range. Stilling basin design and performance for the hollow-jet valves have been investigated quite thoroughly by the Bureau of Reclamation, and no difficulties in operation of this valve and associated stilling basin are envisioned. Further, extensive developmental model tests are not necessary for this type of exit control and hence the design of the entire project will not be impeded.

THE HOLLOW-JET VALVE

Many different types of valves have been developed during the last half century in the search for a control valve that would operate satisfactorily at any opening position and under high heads. The hollow-jet valve seems to adequately meet these criteria. Development was begun in 1940 on this type of valve at the Denver Office of the Bureau of Reclamation by Byron H. Staats and G. J. Hornsby [1, 2][3]. The valve was specifically developed for Anderson Ranch Dam, but the first large prototype (96-in diameter) was installed at Friant Dam in California. The Bureau of Reclamation has since used the hollow-jet valve at many of its installations.

The proportions of the valve in terms of the valve diameter are shown in Fig. 4. The valve became known as the hollow-jet valve because the jet, as it leaves the valve, issues forth in the shape of a doughnut. This doughnut-shaped cross section is segmented into parts by the splitter vanes. From the figure it is also apparent that the hollow-jet valve is in reality a form of needle valve.

The hollow-jet valve consists of an inner needle and a valve casing with its upstream end having the same diameter as the supply conduit. The needle is centrally positioned within the casing by the equally spaced splitters. Free access of air to the interior wall of the hollow-jet is permitted through both the cavities in the hollow splitters and through the slits in the walls of the jet itself caused by the splitters.

As water flows through the valve, it leaves the curvilinear portion of the needle at the knife-edge end of the needle seat ring and clears the downstream cylindrical portion of the needle. This is possible owing to the aeration of the cylindrical portion of the needle by the splitter vanes.

Because of the way the valve functions, it was not intended to be used for discharging under water. However, it can be used in a closed conduit provided adequate provision is made for the admission of air at the appropriate pressure at the outlet end of the valve.

3. The numbers in brackets refer to the references at the end of this article.

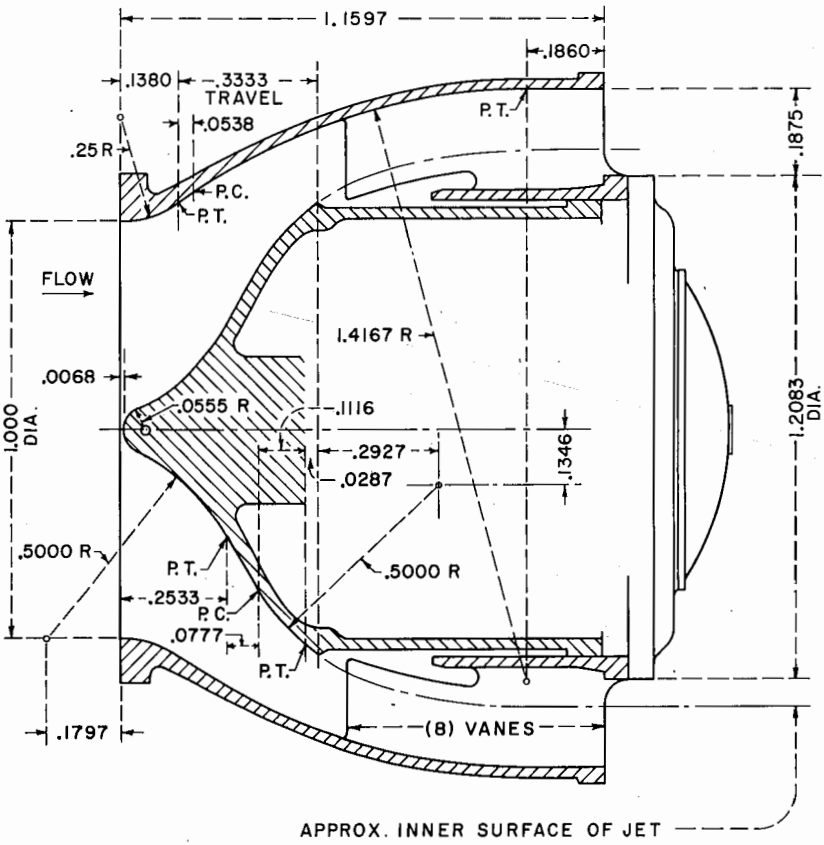

NOTE: ALL DIMENSIONS IN TERMS OF DIAMETER UNLESS OTHERWISE NOTED

Fig. 4 — U.S. Bureau of Reclamation Hollow-Jet Valve: Proportions of Valve and Waterway

The coefficient of discharge of this valve, based on the area of the inlet, is 0.72 for the valve fully open [3]. The discharge coefficient is essentially linear with valve opening between the fully closed and half-open positions, being, of course, zero when the valve is closed and 0.41 when the valve is 50 per cent open. Between half and fully open, the variation in coefficient is curvilinear.

As has been mentioned, the hollow-jet valve is reputed to be cavitation-free in its performance. In order to document this assertion, data from reference 2 have been utilized. Fig. 5 shows the pressure distribution in dimensionless form plotted as a projection on the component parts of the valve for flow through the valve when it is fully open. It is seen that the pressure is everywhere positive for the casing, while the pressure along the needle is only slightly negative a short distance downstream from where the jet springs clear of the needle. Fig. 6 shows the pressure distribution for the valve 10 per cent open. In this position, both the needle and the outer casing experience slightly negative pressures of the order of 2 per cent of the total valve head (pressure plus velocity head one diameter upstream of the valve). The two figures were prepared from data for a 24-in diameter valve discharging under a head of 330 ft, and are intended to indicate only the qualitative form of the pressure variation. Data for a 6-in and a 96-in valve discharging under different heads produce similar pressure variations at corresponding valve openings. For none of these valves at various valve openings did the negative pressure exceed 2.5 per cent of the total valve head. Thus, for heads up to at least 500 ft, cavitation will not occur, provided the valve does not have local irregularities due to casting or machining. It was concluded, therefore, that this type of valve does adequately meet the conditions existing in this instance.

Three 48-in diameter hollow-jet valves have been selected as flow controllers for the Warragamba pipelines. Fig. 7 indicates the discharge capabilities of the pipelines with these valves. Three valves were chosen because of reliability considerations. Thus, with one valve out of service, the maximum flow capability is reduced by only 8 per cent. The valve size of 48-in was selected because it reduces the size of stilling basin required and, in addition, permits the flow rate to be reduced to about 115 mgd at 20 per cent opening, which is an appropriate minimum flow rate and valve stroke.

THE HOLLOW-JET VALVE STILLING BASIN

In the first stilling basins constructed for use with the hollow-jet valve, the valve was aligned to discharge horizontally. A trajectory-curved floor was placed near the valve to assist in spreading the jet uniformly in the

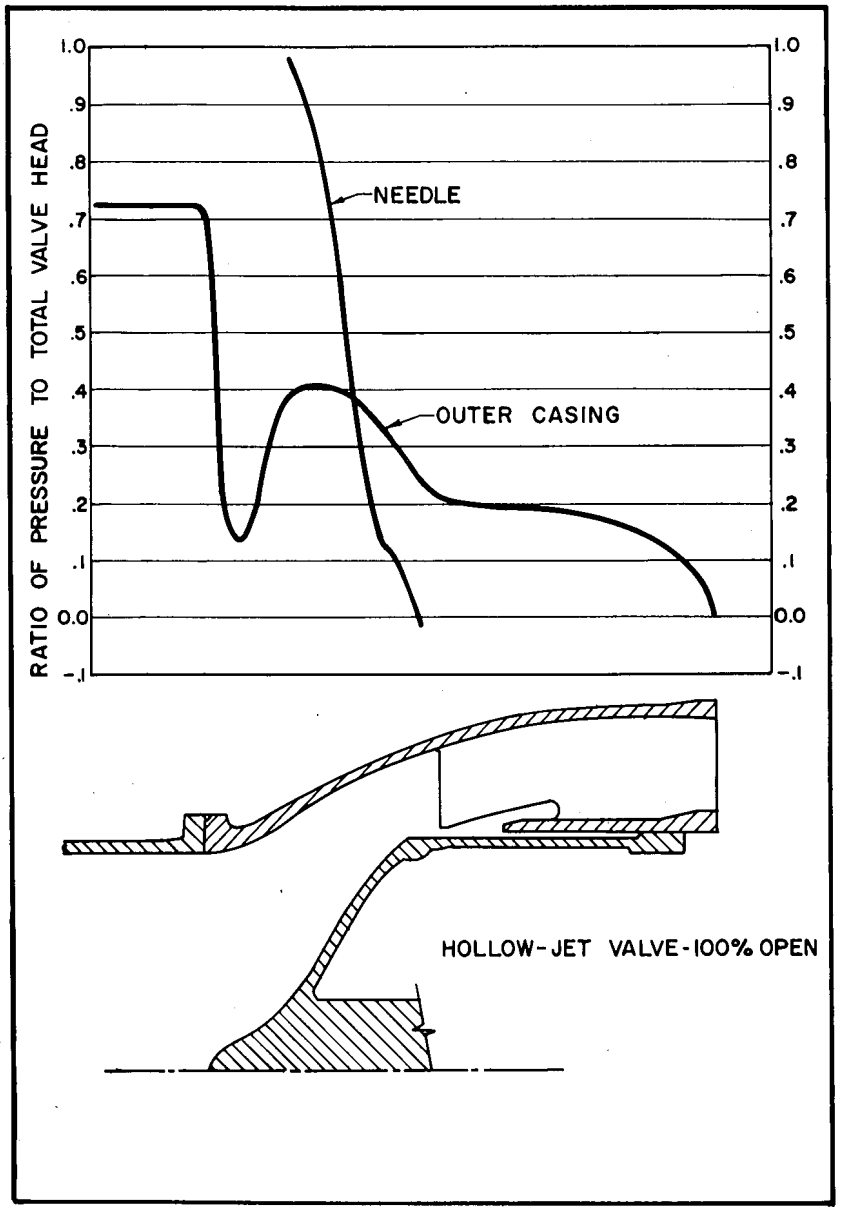

Fig. 5 — Pressure Distribution Within the Hollow-Jet Valve: 100% Open

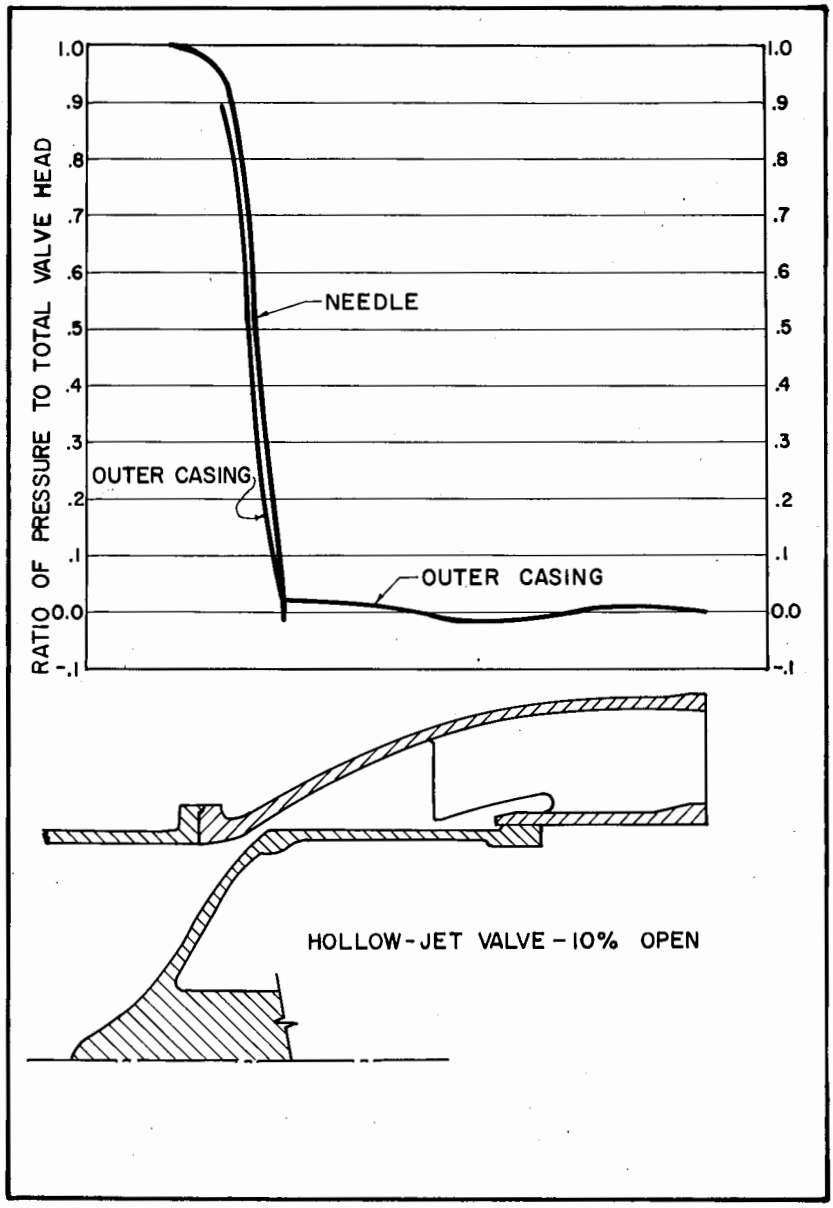

Fig. 6 — Pressure Distribution Within the Hollow-Jet Valve: 10% Open

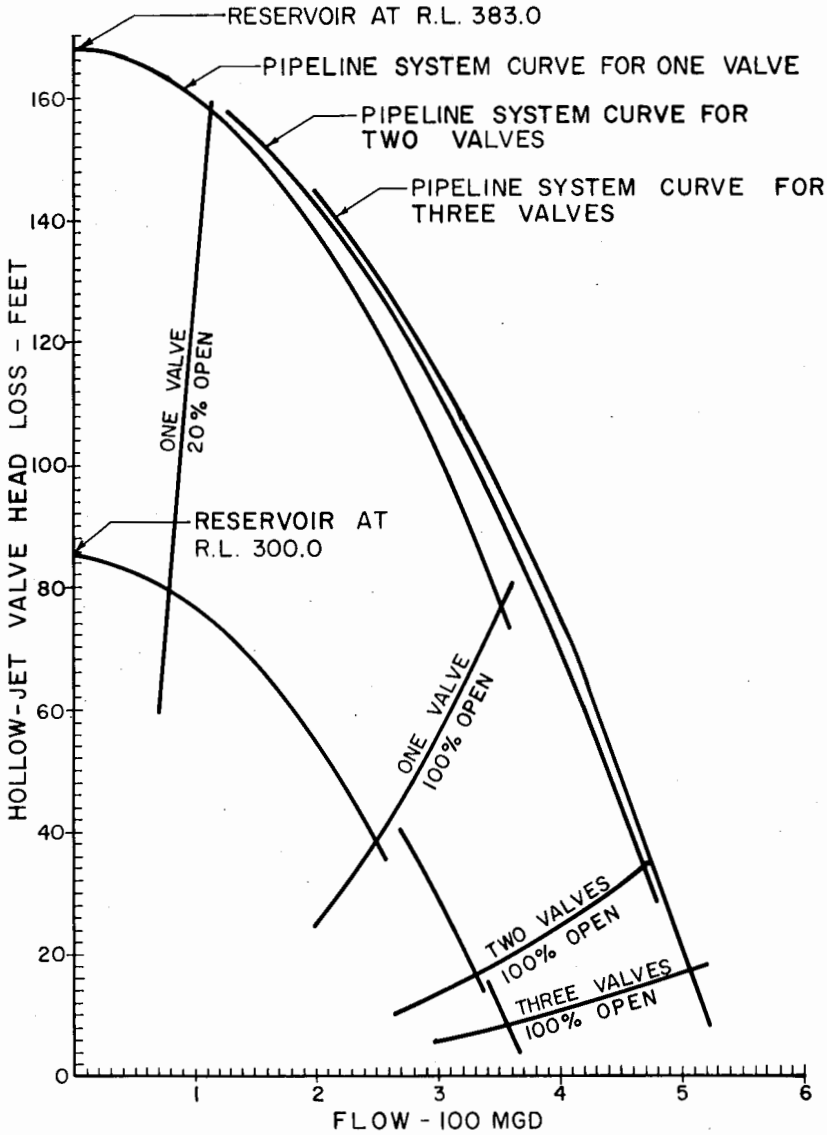

Fig. 7 — Head Loss - Discharge Relationships for the New Warragamba Pipelines Regulating Works

horizontal plane. The jet then entered a hydraulic jump stilling pool. This type of design resulted in an extremely long structure, and containing the jump within the basin was sometimes difficult.

For the U.S. Bureau of Reclamation's Boysen Dam, a different type of basin was developed, which eventually led to the Bureau's standard Basin VIII. The valve was aligned downward rather than horizontally. It was found that the optimum angle of entry of the jet into the tailwater pool was 24 degrees from the horizontal. For lesser angles the jet skipped along the tailwater surface, while for steeper angles the jet penetrated the pool but about-faced and rose vertically to the surface to form a large boil. The floor beneath the jet where the jet first entered the basin could not be horizontal, but had to essentially follow the jet to project it from turbulent eddies. A floor slope of 30 degrees from the horizontal was found to be satisfactory. Converging sidewalls on this 30-degree floor materially aided the performance of the basin. These converging walls effectively controlled surface boiling, created additional energy loss due to the expansion of the jet at their ends and forced the jet to penetrate the tailwater pool for a longer length. Fig. 8, reproduced from reference 3, indicates the form of the basin as it has developed over the years.

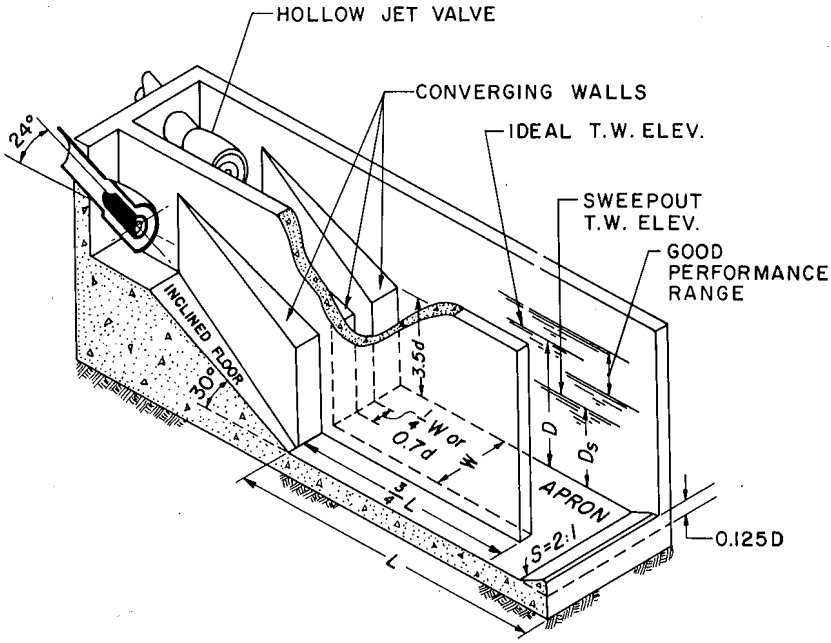

Fig. 8 — Generalized Form of the Hollow-Jet Stilling Basin

It became apparent to the Bureau of Reclamation after model testing a number of basins of the Boysen type that the design could be generalized, and hence it developed a testing program to do so. From Fig. 8, it is seen that the size of the basin is effectively specified by the length, L; the width, W; the ideal depth, D, or the sweep-out depth, D_S. The ideal depth was judged by visual appearance and quality of the stilling action and by smoothness of the tailwater surface. The sweep-out depth was based on the minimum tailwater elevation necessary to maintain the stilling action within the basin and prevent the jet from sweeping out the basin. The generalization tests verified that the basin size parameters were a function of the valve diameter, d, and the valve discharge head and opening, and consequently related to the power dissipation by the basin. The Bureau of Reclamation monograph [3] presents the normalized basin size parameters, D/d, D_S/d, L/d, and W/d as graphical functions of the normalized head, H/d, and the valve opening percentage. All of the normalized basin size parameters increase with increasing values of H/d, and for a constant value of H/d, decrease with decreasing valve opening.

It is interesting to see if the basin size parameters can be represented as a function of a single parameter rather than by both H/d and the valve opening percentage. If the head on the valve is replaced by its equivalent expression, $8Q^2/\pi^2 gC^2d^4$, where C is the valve discharge coefficient at the appropriate valve opening, then H/d at a particular valve opening can be expressed as a function of Q^2/d^5. If the basin size parameters from the Bureau's monograph are now plotted versus Q^2/d^5, it is found that this is a fairly adequate parameter. (For the sweep-out parameter, D_S/d, valve openings of 100 and 75 per cent give almost perfect agreement, while that for the 50 per cent opening is greater at most by 16 per cent.) All of the normalized basin size parameters increase with increasing values of Q^2/d^5. Thus, for a given valve configuration, determination of the critical flows governing basin size can generally be found by examining values of Q^2/d^5 for each valve rather than comparing performance for the valves at different openings.

As indicated previously, three 48-in hollow-jet valves had been chosen as the primary control valves for the Warragamba pipelines outlet works. From Fig. 7 it is seen that the maximum discharge for a single valve is 350 mgd; for two valves operating simultaneously, 470 mgd; and for three valves, 510 mgd, or the discharge per valve is 350, 235, and 170 mgd respectively. Thus, it should be expected that a single valve operating fully open (this gives the largest value of Q^2/d^5) will determine the basin size and that 350 mgd through a single valve will have more of a tendency to sweep

out than any other flow. Further, reference to Fig. 3 indicates that a single valve discharging 350 mgd will have to dissipate 7,150 HP, while two valves operating simultaneously will dissipate 2,050 HP apiece, and three valves 583 HP apiece. Fig. 3 also shows that the maximum power dissipation by the outlet works occurs very close to 350 mgd so that maximum power dissipation for the outlet works as a whole is approximately the same as that through a single valve.

A single hollow-jet valve 48-in in diameter discharging 350 mgd (650 cfs) requires a head of approximately 80 ft. Therefore, H/d is equal to 20. From the Bureau of Reclamation's monograph, the requisite basin size is: length of 57 ft; width of 10 ft; an ideal depth of 16 ft; and a predicted sweep-out depth of 13 ft.

The discharge elevation of the outlet works is governed by the requirements of the treatment plant and the desirability of using Prospect Reservoir for storage when needed, and hence was set 17 ft above the high water elevation of the reservoir. The outlet works discharge can be routed either to Prospect Reservoir or to the clarifiers of the treatment works. When flow is directed to the clarifiers, the tailwater will vary by 1.5 ft in the stilling basin for flows between zero and maximum flow. A control weir is required in the Prospect Reservoir discharge channel to ensure that the stilling basin tailwater variations will not be such as to, on the one hand, submerge the hollow-jet valves and cause them to cavitate, and, on the other hand, cause sweep-out to occur. It is desirable to limit the width of the control weir and associated channels and hence allow the tailwater variations in the stilling basins to be the largest possible.

As a consequence of the above conditions, the floor of the hollow-jet stilling basin was set at R.L. 198, the top elevation of Prospect Reservoir, and the hollow-jet valves were set so that their center line was 17 ft above the floor level. The resulting ideal depth of the stilling basin for 350 mgd is 1 ft below the valve and the sweep-out depth is predicted at 4 ft below the valve. This allows the control weir in the Prospect Reservoir channel to have a head variation of about 5 ft which produces a reasonable width of weir and channel. Because of the tightness of the design, it is desirable to verify the predicted basin performance by model tests and, in addition, to obtain further design information.

THE IMPACT STILLING BASIN

The impact stilling basin was developed by the U.S. Bureau of Reclamation primarily for use with irrigation projects [3]. As with the hollow-jet stilling basin, a series of generalization tests led to its development as a

standard basin (Basin VI). The basin size is a function of the maximum discharge, while performance is essentially independent of tailwater variations.

The impact basin is an open rectangular box, with a supply pipe at one end of the box and a control sill at the opposite end of the box (see Fig. 9B). Intermediate between these two points is a hanging baffle. The jet from the supply pipe is supposed to impinge upon this baffle, spread out, and flow under the baffle. Thus, the designation of the basin is the impact stilling basin. The control sill at the end of the basin forces the jet to spread out within the basin in order to meet the requirement of discharge over the entire sill.

For the Warragamba pipelines outlet works, four impact basins were proposed. Each impact basin would be fed by a 72-in diameter supply pipe and would have a 16.5 ft inside width. The maximum discharge capacity of each basin would be 339 cfs, with the total possible discharge through the four basins being 730 mgd. This would allow for increased capacity through the outlet works in the event that the pipeline capacity is increased in the future.

THE COMPOSITE STILLING BASIN

As discussed above, the Warragamba pipelines stilling basin will consist of three hollow-jet basins and four impact stilling basins. The three hollow-jet basins will be be identical in size, so that any one of them will be able to discharge the critical flow of 350 mgd, thus providing for an outlet works of high reliability, and also capable of handling increased flows in the event of any future pipeline expansion. Fig 9 shows the original layout of the proposed basin, with the hollow-jet basins in the middle and the impact basins adjacent. The entire complex of basins connects to the exit channel by a smooth curvilinear transition.

The Warragamba pipelines terminate at a 120-in manifold. From the manifold, supply pipes bring the flow to each of the seven separate basins. All of the supply lines are equipped with guard valves to permit servicing of the operating valves. The supply pipes to the hollow-jet valves are designed to keep the pipe velocity to a reasonable value. The center-line elevation of the manifold is depressed below the center-line elevation of the outlet in order to keep the pressure in the manifold positive at maximum flows.

The preliminary design was done by Camp, Dresser & McKee. The Board is responsible for the final design and preparation of construction drawings for the composite basin, and has performed rather extensive model tests to verify the hydraulics of the basin and determine other

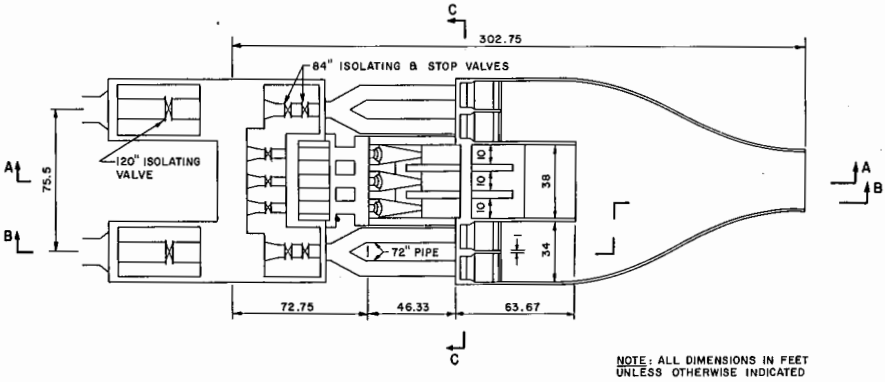

Fig. 9A — The Warragamba Pipelines Stilling Basin - Plan

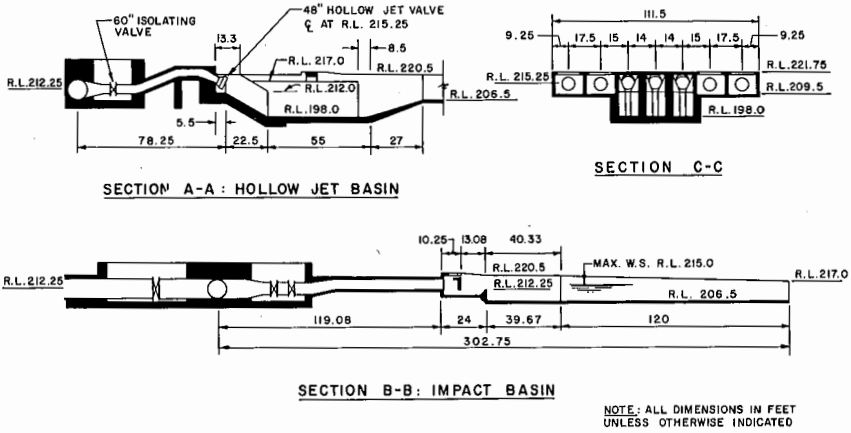

Fig. 9B — The Warragamba Pipelines Stilling Basin - Sections

pertinent design information. Some of the findings of the model tests follow. A complete description of the model tests and the results obtained will be contained in a paper soon to be published by the Board's Engineers in charge of the work.

MODEL OF THE COMPOSITE BASIN AND HIGHLIGHTS OF TEST RESULTS

The Sydney Water Board built a 1:20 scale model of the composite stilling basin at its Manly Hydraulics Laboratory. Tailwater level control was by a tilting weir in the discharge channel.

The overall hydraulic performance of the model basin for the outlet works discharging to the treatment plant was very good. As expected, the critical discharge was through a single hollow-jet valve fully open, producing the maximum amount of turbulence in the basin (see Fig. 10). Wave heights at the entrance to the discharge channel were estimated at 5-in prototype for this condition, and negligible for two or three hollow-jet valves discharging simultaneously. Discharge through the four impact basins (hollow-jet valves closed) gave excellent stilling action, being somewhat better at the higher tailwaters.

The sweep-out depth as determined by Sydney's model tests was in excess of that predicted by reference 3. The Bureau of Reclamation's graph gives a depth of 13.1 ft. The model test of the composite basin had a sweep-out depth of 15.3 ft, or 16 per cent greater. Fig. 11 shows in a rather dramatic fashion the effect of sweep-out. Because of the greater elevation of the sweep-out depth, the control weir in the Prospect discharge channel has to be redesigned from its preliminary dimensions.

The model tests showed good stilling action in the impact basins. At flow rates less than the maximum rates given by the U.S. Bureau of Reclamation, the impact action does not occur. Instead, the jet from the supply pipe dove under the impact baffle, but the stilling action was not impaired. As the size of these basins was selected conservatively, the impact action is not anticipated, and the baffles will not be installed.[4]

Tests were also conducted to determine the magnitude of the loads on the walls of the hollow-jet stilling basins. Reference 3 had indicated that in the model tests for Boysen Dam, the maximum pressure on the stilling basin floor beneath the impinging jet was less than one-fourth of the total valve head. Communication with the U.S. Bureau of Reclamation by the Sydney

4. Since the presentation of this paper, additional model testing by the Board has resulted in further design modifications. These consist primarily of reducing the dimensions of the stilling basin areas in front of the 72-in diameter nozzles. As noted, the Board will publish a description of the final design of the composite basin.

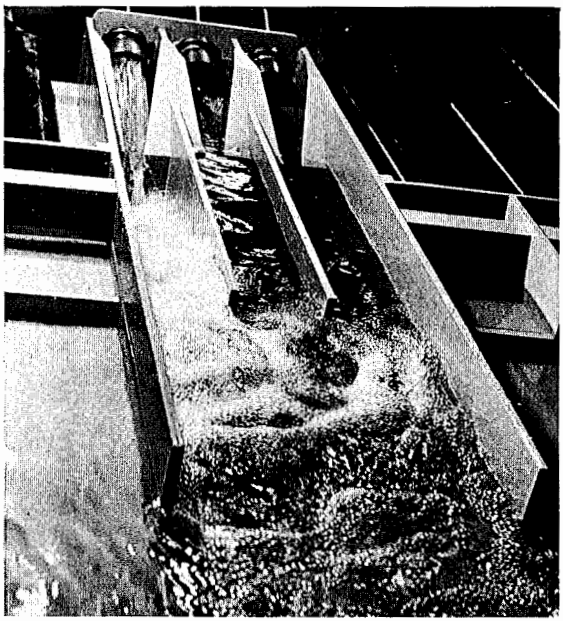

Fig. 10 — Model With One Hollow-Jet Valve Discharging 365 MGD at a Depth of 16 ft.

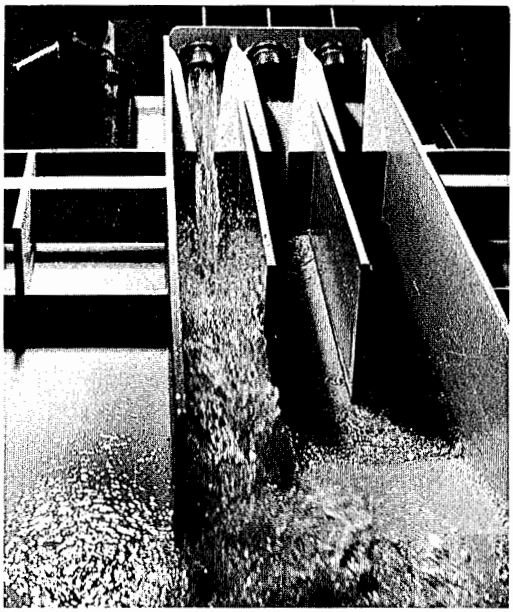

Fig. 11 — Model with One Hollow-Jet Valve Discharging 365 MGD at Sweep-Out Depth

Water Board indicated that the Bureau had recently found that pressure differentials across the dividing walls in multiple hollow-jet basins reached up to 70 per cent of the valve velocity head, and that this dividing wall vibrated at frequencies of 3.5 to 6.9 cps (prototype). Sydney has found that the maximum load on the walls of the basin can be represented by the following: 0.4 of the maximum hydrostatic pressure at the water surface with a linear increase to 1.6 times the maximum hydrostatic pressure at the base of the wall. This represents both the static and dynamic loads. For the purposes of design, the dynamic portion of the load was multiplied by a factor of three. Pressure fluctuation frequencies were also measured in the Board's model, corresponding to fluctuations of 1.2 to 4.5 cps in the prototype.

CONCLUSIONS

Generalized stilling basin designs such as those developed by the U.S. Bureau of Reclamation enable a designer to choose among different types of basins and know essentially how they will function. This can accelerate the design process immensely by eliminating developmental tests. However, all important and large designs should still be tested, both for verification and for further information that is invaluable to the complete design picture.

REFERENCES

1. Davis, C. V., Handbook of Applied Hydraulics, McGraw-Hill Book Co., Inc., 2nd edition, pp. 361-364.
2. Lancaster, D. M., The Hydraulic Characteristics of the 96-Inch Hollow-Jet Valves Controlling the River Outlets through Friant Dam Central Valley Project, California, Hydraulics Laboratory Report No. Hyd-388, Bureau of Reclamation, U.S. Department of the Interior, November 26, 1954.
3. Peterka, A. J., Hydraulic Design of Stilling Basins and Energy Dissipators, Water Resources Engineering Monograph No. 25, Bureau of Reclamation, U. S. Department of the Interior, July, 1963, Section 8 — Hydraulic Design of Hollow-Jet Valve Stilling Basins (Basin VIII).